Table of Contents

Abt Associates Inc.
Suite 500
4250 Connecticut Avenue, N.W., Washington, D.C. 20008-1173
Telephone (202) 362-2800

PREVENTING FRAUD AND ABUSE IN THE FOOD STAMP PROGRAM: THE USE OF COMPUTER ASSISTED VERIFICATION OF APPLICANT-REPORTED INFORMATION

Contract No. 53-3198-6-69

February 26, 1988

Prepared by:

Michael J. Puma
Abt Associates, Inc.
4250 Connecticut Avenue, N.W.
Suite 500
Washington, D.C. 20008

Prepared for:

Melody Bacha
U.S. Department of Agriculture
Food and Nutrition Service
Office of Analysis and Evaluation
3101 Park Center Drive
Alexandria, VA 22302

Michael Puma Contract Manager	Jean C. Wood Quality Control Reviewer	Jean C. Wood Management Reviewer

AN EQUAL OPPORTUNITY EMPLOYER

Table of Contents

Table of Contents

ACKNOWLEDGEMENTS

This report was made possible with the kind assistance of many people. The author gratefully acknowledges the help of: the State and local staff in the nine States we visited who gave freely of their time; John Agliato, Cathy Casserly, Margot Cella, Gail Simpson, Ruy Teixeira and Alan Werner who conducted the sites visits and prepared the case studies; Dan Finnegan and Gail Simpson who did much of the cost benefit analysis; Mary Gabay who assisted with the analysis of the cost-benefit data; and Marsha Strother who produced the report. I would also like to thank Melody Bacha (the Project Officer), John Hitchcock, Carol Olander, Edward Speshock and Manuel de la Puente of the Food and Nutrition Service and the members of our Advisory Panel (Peter Bateman, Larry Bailis, Barry Bodell, Jerry Evans, Rudolph Schwartz and Bert Webb) who reviewed drafts of this report and provided useful suggestions and comments.

Table of Contents

Table of Contents

EXECUTIVE SUMMARY

STUDY BACKGROUND

The Food and Nutrition Service (FNS), as part of its ongoing effort to improve the efficiency and integrity of the Food Stamp Program, has encouraged the development of computerized systems for verifying applicant-reported information. This "front-end" verification is defined as the matching of applicant-reported information against independent data sources to verify income and resource information and other household circumstances prior to certification for benefits. Typically, such applicant matching includes checking wage records, benefit records for food stamps, Aid to Families with Dependent Children (AFDC), Medicaid, and Unemployment Insurance (UI) as well as other data sources that can be used to determine eligibility for program benefits.

In order to learn more about the effectiveness of applicant matching, FNS contracted with Abt Associates Inc. and Quality Planning Corporation to conduct an evaluation intended to: document the organizational structures and operational procedures used to implement such systems; to measure the associated costs and benefits; and, to disseminate these findings in the form of technical assistance to States seeking to implement new systems or to expand existing systems.

This study was intended to be an exploratory effort. Because of the lack of prior research on applicant matching, FNS believed that an in-depth study of a small number of sites would be both more informative and would

verifying applicant data prior to certification. Rather than a broad cross-sectional picture of the current state-of-the-art, our objective was to describe a small number of relatively experienced operations and to identify how these systems might be successfully duplicated in other locations.

Table of Contents

The information used for this study consists of a combination of applicant data for 2,500 households and in-depth interviews with State and local administrators and staff. The result is a rich source of information that combines the strengths of quantitative measures of the costs and savings associated with applicant matching with the perceptions, opinions and experiences of those who have developed and implemented these systems.

THE DECISION TO DO APPLICANT MATCHING

All States are required to conduct periodic computer matches of applicants and recipients with various data sources including employer-reported wage records, UI and SSA benefit records and IRS data on unearned income. The mechanics of doing the actual computer matching are essentially the same for both recipients and applicants. Identifying information on the individual (e.g., SSN, name) is compared to similar data maintained in one or more central data files (e.g., wage records). If a match is found, the information available on that individual is returned to the requesting party. The results either confirm the applicant-reported data or indicate a possible discrepancy which must be resolved. Accelerating this process for eligibility decisions has been the next logical step in the development process because detecting errors up-front can increase the savings in benefits and administrative costs achieved through matching. The important factor in applicant matching as studied here, of course, is that for the match information to be useful in the certification process it must be available to the eligibility worker for use in the certification process. Under current regulations that process must be completed so that an opportunity to participate can be provided within 30 days of when an individual has submitted a signed application.

A number of concomitant factors have contributed to the growth of applicant matching:

1. Technological developments in data processing have made the necessary systems relatively easy and inexpensive to implement. The availability of Federal funding has also provided an incentive for States to automate their welfare programs.

2. Federal requirements to conduct computer matching for active cases has made the necessary data sources available. It is a natural extension to use these same data to check applicant information up-front before households are certified for benefits.

3. Concerns over high payment error rates have provided an incentive to States to find ways to reduce fraud, waste and abuse in public assistance programs.

4. Successful experiences with computer verification in other States contributed to an environment that supported States' decisions to expand the use of computer matching to cover applicants.

Table of Contents

The general need to provide timely match results has, for the most part, led to the use of statewide computer networks which permit local offices to enter data on individual applicants and receive output directly. However, these systems were not put in place for the purposes of applicant matching. To the contrary, the development of automated case management systems has provided most of the hardware, software and trained staff needed to implement applicant matching. Once available, it has been relatively easy to use or adapt these systems for other purposes such as applicant matching. On-line, interactive processing is not a necessity however; overnight batch processing can be used. The basic pre-requisite for applicant matching is that staff have easy access to the match data and can get timely results.

THE DETECTION OF ERRORS THROUGH APPLICANT MATCHING

Based on an examination of about 2,500 applications submitted to the nine study sites over a 3-6 week period, we found the incidence of discrepancies identified through applicant matching to be relatively low. Overall, 5.7 percent of screened applications were found to have a discrepancy between applicant-reported information and the data available from an external source. However, only for 3.3 percent of the total number of applications did this discrepancy lead to a change in benefits; about 2.3 percent received reduced benefits and about one percent had their eligibility denied altogether. Although the incidence of discrepancies and benefit changes is relatively low, avoiding this level of overpayment error prior to certification would be expected to make an important contribution to reducing States' overall payment error rates.

Most of these discrepancies and benefit changes are detected through matches against a few data sources. The wage and UI benefit matches account for about 46 percent of the detected discrepancies and, more importantly, 54 percent of the cases with benefit changes and 57 percent of those cases that are denied. Another data source producing a large proportion of discrepancies is motor vehicle records, which accounts for 23 percent of the total.

Although the differences are small, it appears that larger households, those with employed persons, and elderly households have a somewhat greater chance of being found discrepant through applicant matching. Household size probably reflects an increased opportunity for error -- the more people in the household the greater the chance for an error to be detected in reported circumstances. The presence of earnings is not surprising given the previously mentioned effectiveness of wage matching and prior findings from the food stamp QC system. Finally, the presence of an elderly household member is related to errors in Social Security and SSI benefits. The largest difference, however, is for food-stamp only households that were found to be disproportionately represented among households found with errors.

Table of Contents

SAVINGS DUE TO APPLICANT MATCHING

With one exception, all of the sites realized some savings from applicant matching. On average $11.60 was saved on each application for which a certification decision was made. Of this average amount, 55.2 percent represented reduced food stamp payments, 13.6 percent reduced AFDC benefits, 14.8 percent reduced Medicaid benefits and, 16.4 percent avoided food stamp and AFDC administrative costs.

This average savings from applicant matching, however, varied substantially from site to site. Average savings ranged from highs of $26 per application in Pima County and $19.83 in Wake County to lows of $1.72 in Sioux Falls and zero in Knox County. In large part, this variation is due to the number and types of error cases that are detected through applicant matching. For example, DeKalb County with average savings of $2.77 had only 3 cases which led to reduced benefits (none of these were denials). Wake County, on the other hand, had 27 cases with benefit changes, 8 of which were denials.

COSTS OF APPLICANT MATCHING

The costs of applicant matching used in this analysis included only operating costs, i.e., the labor costs needed to screen applicants and follow-up on match results (labor costs included fringe benefits and overhead) and the cost of the computer transactions. We did not include either amortized development costs or fixed costs such as equipment purchases. These costs, therefore, represent marginal costs or the cost to screen one additional applicant given that the capability to do applicant matching is already in place.

The most striking result of the cost analysis is the relatively low cost of applicant matching. Once the mechanism is put in place to do computer verifications, it is very inexpensive to screen applicants against the available data sources. Computing costs are low and the labor time required is relatively insignificant. On average, the cost per application is $3.06 with $1.90 of this total a result of labor costs (about 62 percent) and $1.16 associated with the computer costs (about 38 percent).

The average costs of doing applicant matching, while they vary from site to site, are far more consistent than was observed on the savings side of the ledger. On the high end are Pima County at $6.22 and Wyandotte County at $4.52; on the low end are Sioux Falls at $1.53 and Knox County at $1.46. For the most part, the observed variation is due to differences in the number of databases used and the number of discrepancies found that require resolution with the applicant.

The labor required to do applicant matching is quite minimal, on average about 6 minutes per application. Computer screening takes very little time and, because the majority of match results do not provide information that are different from what the applicant reported, most match results do not require much time to resolve. Moreover, where discrepancies are found, it is usually the responsibility of the applicant to provide documentation that either corroborates or refutes their reported circumstances. As a consequence, the cost of following-up on match results is also low.

Table of Contents

COMBINING SAVINGS AND COSTS

Having estimated the costs and savings associated with applicant matching, we can combine the two to form a ratio of savings to costs that allows us to judge the effectiveness of computer verification. Overall, applicant matching appears to be cost effective; for each dollar spent almost four dollars in savings is realized. This is a substantial gain and almost twice as good as prior research has indicated for computer verification of information for active recipients (which averaged about two to one).

A positive net savings is not, however, evident for all sites. Knox County had a net loss of $446.02 (about $1.46 per application) and DeKalb County had a net loss of about $266.09 (or about $1.30 per application). But, the results for particular sites should be examined with the following points in mind:

- The figures shown for an individual site are estimates and, therefore, subject to some uncertainty. We took a snapshot of applicant matching at each site and based our results on the number of applications found in error during that short period of time. If we were to go back at a different time we would, in all likelihood, find different numbers of errors at each of our nine sites.

- The estimates exclude possible deterrence effects. To the extent that such effects are large, excluding them will underestimate the savings from applicant matching. This can be of particular importance for those sites where the likelihood of deterring misreporting is greatest. For example, DeKalb County had a large number of voluntary withdrawals during the period of this study. It may be the case that they are deterring at least some applicants from applying for benefits because of the possibility of having their information computer verified. If these potentially misreporting individuals had submitted an application, the number of detected errors and the associated savings may have been higher for DeKalb County. A similar situation may have also affected Knox County.

Consequently, the overall results based on combining the findings from all of the sites should be viewed as the best estimate of the cost effectiveness of applicant matching.

Table of Contents

THE EFFECT OF PROCEDURAL DIFFERENCES ON SAVINGS AND COSTS

Computer Systems

This study found that applicant matching can be done successfully using various configurations and types of computer equipment and systems including: different types of computer hardware; the use of both direct mainframe computer processing and distributed networks employing mini-computers; interactive versus batch processing; and, the use of a wide range of software from COBOL to new fourth-generation languages such as Natural. Computer costs are low and what variation exists is unlikely to have an important effect on this simple database inquiry.

Office Procedures

This study found that applicant matching can be done effectively with different operational structures for using the match information. The offices visited as part of this study varied in how they certified applicants for food stamp benefits including the types of forms used, staff assigned to perform various functions, and the sequencing of steps in the process. But all were able to successfully integrate applicant matching into their certification procedures without having to give up local flexibility. The staff time required to match applicants (sites used from 2 to 7 databases) and review the results is very small (averaging about 6 minutes per application). As a consequence, to add this step to an existing certification process is neither burdensome for local staff nor difficult to do once the necessary computer systems are in place.

How applicant matching activities are assigned to different types of workers appears to have little effect on costs. The difference in wage rates between clerks and eligibility workers was typically small, on the order of from $2.00 to $3.00 per hour. Given that the time required to do most applicant matching functions was also small (an average of about 6 minutes per application), the observed difference in wage rates is insufficient to lead to large differences in the cost of applicant matching.

The sites included in this study made use of a wide variety of data sources, however, matching against wage and UI records and records of motor vehicle ownership accounted for about 70 percent of the applications affected by matching. In large part, this difference is due to the types and prevalence of errors each source can detect. For example, asset errors detected through motor vehicle and property records checks can, if large enough, make the applicant ineligible which leads to the potential for a large benefit savings. In addition, the different types of errors are not equally prevalent. For example, only a few applicants can receive SSI benefits so the number of errors that can be detected with SDX matching is also small.

Study results indicate, however, that sites which match applicants against a large number of data sources were able to achieve greater savings than those sites which focused on only a few verifications. Because the cost of doing the screening is low, identifying even a small number of misreporters generally provides savings that exceed the cost of the matching activity.

Table of Contents

Although we were unable to discover a strong relationship between the savings and costs of applicant matching and particular operational procedures, States and local staff suggested several ways to improve the effectiveness of applicant matching:

1. Some staff believed that it is better to complete as many of the computer matches as possible before conducting the intake interview. This approach, in their view, gives the eligibility worker the benefit of this wealth of information at the time when it can be of most use. In contrast, some staff perceived greater gains from completing most matching after the intake interview thereby allowing them to review the match results with the applicant's complete story already in hand. The sites in this study matched applicants against different data sources with no apparent relationship to the magnitude of benefit savings.

2. Targeting specific types of applicants for particular computer matches can be used (for example, matching against SDX only if the household contains an elderly member). However, if possible, matching all applicants against all of the available databases appears to be warranted. The increase in cost is relatively small and should be outweighed by the gains from identifying additional instances of misreporting.

3. Because the time required to screen applicants and review the results is typically very small (i.e., on average 6 minutes per application), as noted above, using clerical workers rather than eligibility workers to do this probably will not provide great reductions in the cost of applicant matching. But, any savings achieved can only improve the extent to which applicant matching is cost effective.

In summary, no matter how a local office chooses to do applicant matching our results indicate that a net savings will probably be achieved.

QUALITATIVE EFFECTS OF APPLICANT MATCHING

In addition to the "measurable" costs and benefits of applicant matching there are other issues that should be given consideration in any evaluation of applicant matching:

- An almost universally voiced opinion was that applicant matching significantly <u>improved the morale of eligibility workers</u> by helping them to establish the integrity of their case determination. Obtaining computerized information on applicant's income and resources helps give caseworker's confidence that they are accurately processing applications and awarding clients the proper amount of benefits.

Table of Contents

- The availability of information about individual applicants was seen to improve the delivery of services to clients. First, access to information about individual applicants allows eligibility workers to more easily meet case disposition deadlines and documentation requirements. This enables eligible applicants to receive the benefits they are entitled to in a timely fashion. Second, the computerized information can, in some instances, identify alternative sources of income to which an individual may be entitled. For example, caseworkers can occasionally save some food stamp and other welfare benefits by identifying applicants eligible for Unemployment Insurance (UI) benefits. In these situations, applicants are told to apply for UI during the food stamp application process. Third, access to computerized databases can be a way to save applicant's time. This occurs when the computer can provide verification of some aspect of an applicant's income or resources, thereby obviating the necessity for the applicant to locate and bring in the verification themselves. This can be particularly beneficial in the case of an elderly or disabled applicant for whom physically visiting the office is a substantial burden. Similarly, on-line access to vital statistics records can help obtain verification of a child's birth.

- Applicant matching can also deter misreporting. Although none of the sites had concrete evidence of deterrence effects, most staff seemed to believe that, at least some clients were now being careful when reporting their household circumstances. In particular, the use of a computer in the presence of the applicant to uncover or corroborate information is thought to be especially helpful during the intake interview and subsequent eligibility determination process. Applicants do not know what additional information caseworkers might have at their disposal and may overestimate the amount of data available to the agency.

IMPLICATIONS FOR PROGRAM ADMINISTRATORS

On the basis of the results of this study, it appears that offices that are not now doing applicant matching, and have the necessary computer network available, should consider designing and implementing the necessary systems and procedures. For those offices that are doing it now, but on a limited scale, the results suggest that they seriously consider expanding operations to include more data sources and/or to screen more applicants if they are now targeting matching to specific types of households. Once the system is in place, the cost of matching applicants is low and even though the number of errors detected is small, the savings in benefit payments and administrative costs outweigh the resources required to do it.

CONTENTS OF THIS REPORT

The remainder of this report consists of three major parts: a synthesis of findings from case studies of applicant matching at nine sites; copies of the individual case studies; and, guidance materials for use by State and local administrators.

TABLE OF CONTENTS

ACKNOWLEDGEMENTS..... i

EXECUTIVE SUMMARY..... ii

CHAPTER ONE - INTRODUCTION..... 1

Study Background..... 1
What is Applicant Matching?..... 2
Legislative and Regulatory Background..... 2
Prior Research Related to Applicant Matching..... 5
Policy Issues and Study Objectives..... 10
Contents of this Report..... 11

CHAPTER TWO - STUDY METHODOLOGY..... 13

Site Selection..... 13
Data Collection..... 15
Analyzing Costs and Savings..... 26
Summary..... 35

CHAPTER THREE - DESCRIPTIONS OF APPLICANT MATCHING PROCEDURES AT STUDY SITES..... 37

Developmental Consideration..... 37
The Role of Applicant Matching in the Certification Process..... 42
Computer Systems..... 69
Future Development Plans..... 74
Summary..... 76

CHAPTER FOUR - THE COSTS AND SAVINGS ASSOCIATED WITH APPLICANT MATCHING..... 77

Savings From Applicant Matching..... 78
Cost of Applicant Matching..... 80
Allocation of Savings and Costs by Level of Government..... 81
Savings-Cost Ratios..... 82
The Effect of Procedural Differences on Savings and Costs..... 83
Unmeasured Costs and Benefits of Applicant Matching..... 89
Summary..... 92

CHAPTER FIVE - SUMMARY AND CONCLUSIONS..... 94

The Development of Applicant Matching..... 94
Computer Systems..... 95
Operational Procedures..... 97
Costs and Benefits..... 98
Overall Conclusions..... 99

Table of Contents

APPENDICES

A. Data Collection Instruments..... A1
B. Technical Assistance Materials..... B1
C. Case Study: Pima County, Arizona..... C1
D. Case Study: Kent County, Delaware..... D1
E. Case Study: DeKalb County, Georgia..... E1
F. Case Study: Wyandotte, Kansas..... F1
G. Case Study: St. Louis County, Missouri..... G1
H. Case Study: Hudson County, New Jersey..... H1
I. Case Study: Wake County, North Carolina..... I1
J. Case Study: Sioux Falls, South Dakota..... J1
K. Case Study: Knox County, Tennessee..... K1

Table of Contents

LIST OF EXHIBITS

EXHIBIT 1: ANNUAL COSTS AND BENEFITS OF RECIPIENT MATCHING ESTIMATED BY GREENBERG AND WOLF FOR FOUR SITES..... 7

EXHIBIT 2: NUMBER OF APPLICATIONS RECEIVED AND USED FOR ANALYSIS BY SITE..... 19

EXHIBIT 3: DATABASES CURRENTLY USED FOR APPLICANT MATCHING BY SITE..... 44

EXHIBIT 4: RELATIONSHIP OF APPLICANT MATCHING TO FOOD STAMP CERTIFICATION PROCESS..... 57

EXHIBIT 5: THE INCIDENCE OF DISCREPANCIES AND BENEFIT CHANGES DUE TO APPLICANT MATCHING BY SITE..... 61

EXHIBIT 6: DISCREPANCIES AND BENEFIT CHANGES DUE TO APPLICANT MATCHING BY DATABASE..... 64

EXHIBIT 7: CHARACTERISTICS OF CASES WITH BENEFIT CHANGES DUE TO APPLICANT MATCHING..... 68

EXHIBIT 8: COSTS AND SAVINGS ATTRIBUTABLE TO APPLICANT MATCHING BY SITE..... 78

EXHIBIT 9: COSTS AND SAVINGS DUE TO APPLICANT MATCHING BY DATABASE USED TO VERIFY APPLICANT-REPORTED INFORMATION..... 85

EXHIBIT 10: SAVINGS DUE TO APPLICANT MATCHING RELATED TO WHEN IT IS DONE IN THE CERTIFICATION PROCESS BY SITE AND DATABASE..... 88

Table of Contents

Table of Contents

CHAPTER ONE

INTRODUCTION

STUDY BACKGROUND

During the 1980s, concern about the extent of fraud, waste, and abuse in public assistance programs has been intensified by the debate over the Federal deficit. As a consequence, a great deal of attention has been focused on ways to ensure that benefits only go to eligible persons.

Because of these concerns, the Food and Nutrition Service (FNS), as part of its ongoing effort to improve the efficiency and integrity of the Food Stamp Program, has encouraged the development of computerized systems for verifying applicant-reported information. This "front-end" verification is defined as the matching of applicants against data sources that contain information on applicant's earned or unearned income, liquid or non-liquid resources or household status in a timely fashion to be used to determine their eligibility for benefits. Typically, such applicant matching includes checking wage records, benefit records for food stamps, Aid to Families with Dependent Children (AFDC), Medicaid, Social Security and Unemployment Insurance (UI), motor vehicle registration records and property tax records.

To learn more about the effectiveness of applicant matching, FNS contracted with Abt Associates Inc. and Quality Planning Corporation to conduct an evaluation intended to: document the organizational structures and operational procedures used to implement such systems; to measure the associated costs and benefits; and, to disseminate these findings in the form of technical assistance to States seeking to implement new systems or to expand existing systems.

This report synthesizes the findings from case studies[1] of applicant matching at nine sites: Pima County, Arizona (Tucson); Kent County, Delaware; DeKalb County, Georgia (Atlanta); Wyandotte County, Kansas (Kansas City); St. Louis County, Missouri (St. Louis); Hudson County, New Jersey (Jersey City); Wake County, North Carolina (Raleigh); Sioux Falls, South Dakota; and Knox

---

[1]More indepth information on individual case studies is provided in Appendices C through K.

County, Tennessee (Knoxville). This report uses the information gathered in these case studies, including a quantitative analysis of the costs and benefits attributable to applicant matching, to analyze the similarities and differences among the sites.

WHAT IS APPLICANT MATCHING?

Applicant matching is form of computer-assisted verification techniques that have been developed to detect potential fraud, abuse, or error in the administration of public assistance programs. The basic idea underlying such procedures is simple. With the aid of a computer, two separate sources of parallel information about individuals or households are compared in order to reveal discrepancies between the two. During the match, computer files are compared on the basis of a specific data element, generally the Social Security number, plus some additional identifier such as last name.

When a hit is found (i.e., a match on the identifier) the information is returned to the eligibility worker. The result is an indication that there is, or is not, a discrepancy between the two independent sources of information. Such discrepancies do not necessarily provide evidence of misreporting but merely that there is a reason for further investigation. This may occur through either contact with some third party (such as an employer) or by asking the client to provide additional documentation. For example, a discrepancy noted between applicant-reported information and that available from an external source might have no bearing on eligibility because the external data simply may be out-of-date and not reflect the applicant's current circumstances.

LEGISLATIVE AND REGULATORY BACKGROUND

In the early 1970s, a few States began to use computer matching to check AFDC recipients against wage information from State Employment Security Agencies (SESAs). The success of these early efforts, plus growing public concern over the integrity of welfare programs, led Congress in 1977 to mandate wage matching for AFDC recipients as part of the Social Security Amendments of that year (P.L. 95-216). Under this legislation, States were given until October 1979 to comply.

Table of Contents

The first federal activity in this area was Project Match, announced in 1977 by the Department of Health, Education and Welfare (DHEW), to compare computer records of welfare recipients and Federal payroll files in 18 States, New York City, the District of Columbia, and parts of Virginia. The goal was to identify Federal employees who were fraudulently receiving AFDC benefits. By March 1978, Project Match had identified 7,100 Federal employees who were possibly ineligible for benefits.[2]

As part of the 1980 Food Stamp Act Amendments (P.L. 96-249), Congress extended wage matching to the Food Stamp Program by authorizing FNS and State Agencies to match client data against wage records maintained by SESAs or wage and benefit data maintained by the Social Security Administration (SSA). However, this was just an authorization; it was up to the individual States to institute wage matching. This voluntary feature was subsequently changed by the Food Stamp and Commodity Distribution Amendments of 1981 (P.L. 97-98) which made computer wage matching a requirement for all food stamp applicants.

It is important to understand that matching for applicants in 1981 meant something different than the "front-end" matching which is performed on many food stamp applicants today, and which constitutes the subject of this study. Specifically, matching results were not required in time to affect the individual's case while still an applicant. On the contrary, the requirement was that the match should be done at the earliest possible opportunity, which could mean when the applicant was certified, or at the next scheduled match for active recipients. The choice was left up to the States. In either case, it was highly unlikely that match results would be returned in time to effect the certification decision. In most cases, matching of applicants turned out to be matching of new recipients who had been applicants in the recent past.

In March 1981, the President established the Council on Integrity

Table of Contents

intended to facilitate and improve the use of computer matching and related techniques in Federal and State government. Another important legislative change in 1981 expanded to all household members the requirement that applicants provide their Social Security numbers (SSNs) to local food stamp agencies. Previously, only the individual designated as head of household had to provide this information. The purpose of this change was to improve verification of applicant-reported income because SSNs are a primary identifier and an integral component of the computer verification process.

In 1982, the President established the Private Sector Survey on Cost Control, popularly known as the Grace Commission, to study management problems in government. One of the Commission's major recommendations was the expanded use of computer matching to reduce what was seen as wide spread waste in Federal programs:

> Computer matching is an effective management tool for identifying fraud, waste, and abuse of government benefits, entitlements and loan programs. Computer matching is useful in other ways too, such as validating billings of large government contractors. Recommendations in the task force reports to correct information problems related to this issue provide opportunities for cost savings and revenue of $15.9 billion over 3 years.[3]

Later that same year, Congress enacted Public Law 98-204 which further amended Food Stamp legislation to authorize States that did not routinely collect employer-reported wage data to use alternative sources of data for wage matching purposes (such as employer-reported wage data maintained by the Social Security Administration), if approved by the Secretary of Agriculture.

Most recently, Congress passed the Deficit Reduction Act of 1984 (DEFRA, P.L. 98-369) that mandated the creation of an Income Eligibility and Verification System (IEVS) in each State for use in the Food Stamp, AFDC, Medicaid, UI, Supplemental Security Income (SSI) and adult assistance programs. State IEVS systems were required to include, at a minimum, the following components. First, every State was required to establish a State Wage Information Collection Agency (SWICA) by September 30, 1988. This SWICA

---

[3]President's Private Sector Survey on Cost Control, A Report to the President, Part II: Issue and Recommendation Summaries, p. 82, 1984.

is to collect quarterly wage data from employers in the State. As a rule, States have designated the agency administering their UI program as their SWICA, though alternatives were allowed under the IEVS regulations.

Second, States must match information reported by all applicants and recipients of public assistance with employer-reported wage data, State records of UI benefits, wage and benefit data from SSA and unearned income data from IRS. For a typical recipient, the wage match was to be conducted quarterly, UI benefits generally monthly, SSA information through automatic update from SSA and IRS information yearly. For applicants, information from these sources must be requested at the "next available opportunity". This is basically monthly except that the IEVS regulations specify that the SWICA must process match requests at least twice a month.

Again, while these regulations require that applicants be matched, they do not specify that matching results be returned and used in time to affect the determination of eligibility for benefits. In fact, the regulations specifically state that while these results may be used in benefit determination if returned in a "timely enough" fashion, under no circumstances may benefit determinations be delayed past the 30 day standard of promptness in order to receive IEVS data. Given the turnaround time from even the most available data sources such as SWICAs, the results of matching applicants are generally not received in time to be used to determine eligibility.

This last observation helps sum up the legislative and regulatory background of applicant matching. While the political climate and technical evolution have promoted the growth of computer matching requirements for public assistance programs, applicant matching has no specific legislative mandate at this point. The only requirements that exist relate to recipients of public assistance, not to applicants.

PRIOR RESEARCH RELATED TO APPLICANT MATCHING

The need for this evaluation is highlighted by the limited research on applicant-matching systems. Some research has been done to date on computer matching for income maintenance programs; however, the scope of those efforts has been generally limited to matching for ongoing recipients. Where applicant matching was examined, the assessment was limited to AFDC recipients and to a single source of verification information -- Credit Bureau reports.

Table of Contents

The first major study of computer-assisted matching was a survey conducted by the Office of Family Assistance of the Social Security Administration regarding income data used for verification in the AFDC program.[4] This was followed by a second study of the AFDC program conducted by the Law Enforcement Assistance Administration of the U.S. Department of Justice[5]. Neither study, however, examined the procedures used by local agencies to follow-up on matching information nor did they address the costs and benefits of computer matching.

Wage matching in the Food Stamp Program has been studied by Greenberg and Pfiester[6] and Greenberg and Wolf.[7] However, both of these studies examined wage matching for food stamp recipients, not new applicants. The former study examined the feasibility of using wage data sources for recipient matches, but did not look at costs or benefits associated with their use. Greenberg and Wolf did estimate the benefits and costs of wage matching for recipient cases in the Food Stamp and AFDC programs in four sites: Camden County and Mercer County, New Jersey; San Joaquin County, California; and, the State of New Hampshire's "crossmatch project". The results (summarized in Exhibit 1), indicated that in each case the benefits exceeded the costs.[8] However, the focus of these studies was on the matching of active cases which entails different procedures than applicant matching (especially with regard to the follow-up of detected discrepancies)

---

[4]Trainer, James and Ronald Lentz, Use of Income Data in the Administration of the AFDC Program, July 1978.

[5]Fischel, Michael and Lawrence Siegel, Computer-Aided Techniques for Public Assistance Fraud: A Case Study of the Aid to Families with Dependent Children (AFDC) Program, 1980.

[6]Greenberg, David, and Jennifer Pfiester, Wage Matching Techniques Used in Administering the Food Stamp and AFDC Programs: An Interim Analysis, The University of Maryland, Baltimore County and SRI International, October 1982, revised February 1983.

[7]Greenberg, David, and Douglas Wolf, An Evaluation of Food Stamp and AFDC Matching Techniques, The University of Maryland, Baltimore County and The Urban Institute, May 1984.

[8]Greenberg, David and Douglas Wolf, Using Computers to Combat Welfare Fraud, Greenwood Press, 1987, p.166.

Table of Contents

and yields benefits that are related to the recovery of excess payments rather than the prevention of overpayments from the outset.

EXHIBIT 1: ANNUAL COSTS AND BENEFITS OF RECIPIENT MATCHING ESTIMATED BY GREENBERG AND WOLF FOR FOUR SITES

Site	Total Costs	Total Benefits	Benefit-Cost Ratio
Mercer County	$662,272	$1,413,197	2.14
Camden County	923,450	1,441,637	1.56
San Joaquin County	308,128	779,420	2.53
New Hampshire	264,856	648,362	2.45

The cost-effectiveness of using credit reports as a source of information in initial AFDC eligibility determinations was tested in four sites in 1985 by Applied Management Sciences.[9,10,11,12] While the studies' results indicate that some form of additional income verification can be cost effective in some sites, they are not directly generalizeable to present-day applicant-matching systems for two reasons: (1) the data source (Credit Bureau reports) is one not typically used for matching; and (2) the population examined was AFDC applicants only.

Computer matching systems are also one topic of a current study sponsored by FNS. The Food Stamp Program Operations Study (POS), conducted by Mathematica Policy Research with subcontracts to Abt Associates Inc. and The

---

[9]Applied Management Sciences, New Jersey AFDC/Credit Report Demonstration Project (Phase I) Initial Eligibility Cases in New Jersey. Silver Spring, MD, (undated).

[10]Applied Management Sciences, AFDC Credit Report Demonstration Project (Phase II): Redetermination Cases in New Jersey. Silver Spring, MD, January 1986.

[11]Applied Management Sciences, Kentucky AFDC/Credit Report Demonstration Project, Silver Spring, MD, (undated).

[12]Applied Management Sciences, Pennsylvania AFDC/Credit Report Demonstration Project, Silver Spring, MD, (undated).

Table of Contents

Urban Institute, provides data on computer matching operations in all States from two sources. First, a telephone census of 53 State and territorial food stamp agencies documented the number and types of matching systems in use by the States.[13] Second, a telephone survey of 172 local agencies (two to five per State) collected data on the operational characteristics, organization, and operational procedures used in each of the identified systems.[14] The results of the local agency survey[15] provide a general description of Food Stamp Program computer matching operations:

- The 172 sample local food stamp agencies (FSAs) used 325 distinct computer matching systems, as of late 1986, an average of 4 to 5 different systems per FSA. (A system here was defined as matching against a distinct data source.)

- Although applicant matching was found to be becoming more prevalent, in 26 percent of the local FSAs no front-end matching was being done in late 1986. In contrast, only one FSA was not conducting ongoing recipient matching.

- In terms of the purpose for which the computer matching systems are used, twelve percent of the systems are used in the agencies for front-end matching only, 43 percent are used for ongoing matching only, and 46 percent are used for both purposes.

- The most common data sources used for matching are unemployment insurance files (33 percent of all FSAs), wage records (32 percent of all FSAs), SSI benefits (19 percent of all FSAs), SSA benefits (15 percent of all FSAs), and AFDC files (12 percent of all FSAs).

- Twelve percent of the FSAs have locally-developed computer matching systems, which usually link local property, tax or school records.

- On-line systems were considered by local administrators to be clearly preferable to batch systems for front-end matching and there are some indication that on-line systems are becoming increasingly important for on-going recipient matching.

---

[13]Nightingale, Demetra, et. al., Food Stamp Program Operations Study, Report on Census of State Operations: Computer Matching, The Urban Institute, February 1987.

[14]Nightingale, Demetra and Regina Yudd, The Use of Computer Matching in Local Food Stamp Agencies, The Urban Institute, January 1988.

[15]IBID, p. vi, vii.

Table of Contents

- Local staff have primary responsibility for initiating front-end matching, even when using batch matching systems. Although the State plays a larger role in initiating ongoing matching, there is some indication that for many effective on-going systems, local staff initiate matches.

- Effective systems are somewhat more likely to perform matches on a more frequent basis than other systems. About 90 percent of the effective front-end on-line systems are used for immediate or daily matching; 44 percent of effective front-end batch systems are used for daily or weekly matching; and over-half of the effective on-going batch systems are used for monthly matching.

- About 30 percent of the effective systems have prioritization policies to target certain cases with discrepancies for subsequent follow-up activities. For front-end matching, expedited service cases with discrepant information are often reviewed before other applicants. For ongoing matching, priority is placed on active cases, cases with relatively high benefit levels, and cases with recent employment or earnings identified.

Cost effectiveness measures were, however, not collected in these studies.

Finally, there have also been made available, a number of general guidance materials intended to assist program administrators to design and implement computer-matching systems and procedures. These include: inventories of State computer matching activities[16], a guide prepared by the staff of the Office of the Inspector General of the Department of Health and Human Services (DHHS)[17]; reports by the General Accounting Office (GAO) that

---

[16]Maximus, Inc., Final Report: State Food Stamp Fraud Control Efforts and Related Issues, June 4, 1982; U.S. Department of Labor, Office of Inspector General, Inventory of Computer Matching Activities in State Labor and Related Agencies, December 1982; and, Office of Inspector General, U.S. Department of Health and Human Services, Inventory of State Computer Matching Technology, March 1983.

[17]Michael M. Makowieki, Mark R. Yessian, Sandra E. Dretz, and Victor A. Capoccia, Computer Matching in State Administered Benefit Programs: A Manager's Guide to Decision Making, U.S. Department of Health and Human Services, Office of the Inspector General, November 1983.

contain recommendations for how to make computer matching more effective[18]; and, a newsletter, "Computer Matching" which has been published since July 1982 by the Long Term Computer Matching Project of the President's Council on Integrity and Efficiency.

In summary, although numerous studies have been conducted, there exists very little data specifically about applicant matching. Where it does exist, it is either not directly relevant to the Food Stamp Program or only provides general descriptive information.

POLICY ISSUES AND STUDY OBJECTIVES

Although applicant matching is not required in the Food Stamp Program, FNS has been encouraging its use and many States have responded by implementing the necessary systems and procedures. This has come about largely on the basis of successful efforts to use computers to verify information about active recipients -- little, if any, evidence is available regarding the extent to which applicant matching may be cost effective. The conventional wisdom seems to be that because computer matching for recipients is cost effective then it should be even more effective for applicants. The computer procedures are essentially the same but, with applicant matching, overpayments can be prevented instead of being identified later which requires costly efforts to collect money from welfare clients.

There is, however, at least one fundamental difference between the two types of computer matching. Information on applicants must be obtained and verified in time to be used for certification. Typically, this means within 30 days after the individual submits an application for assistance. In the case of recipient matching, no such time constraint exists; identifying

---

[18]See, for example, Report to the Congress: Legislative and Administrative Changes to Improve Verification of Welfare Recipient's Income and Assets Could Save Hundreds of Millions, HRD-82-9, January 14, 1982 and Report to the Secretary of Agriculture: Better Wage-Matching Systems and Procedures Would Enhance Food Stamp Program Integrity, GAO/RCED-84-112, September 11, 1984. Also see W.D. Campbell, Computer Matching to Detect Error, Waste, and Fraud in Government Programs, mimeo release of the U.S. General Accounting Office in a statement before the Subcommittee on Oversight of Government Management of the Senate Committee on Governmental Affairs, December 16, 1982.

misreporting errors sooner reduces the amount of money that has to be collected but does not affect the basic intent of the computer verification process. With applicant matching, if the documentation cannot be obtained in time, then it cannot be used to prevent overpayments before they occur.

This key difference between recipient and applicant matching raises some important policy questions:

- Should States continue to expand their use of applicant matching? Do the benefits of applicant matching exceed the costs?

- What data sources are available to verify applicant-reported information? Which provide the necessary documentation in time to be used in the certification process? Which data sources are the most cost-effective? How can the available data be improved? What other data sources should be made available?

- Are there important differences in how States do applicant matching such as when it is done in the certification process, who does it, how discrepancies are resolved, what computer systems are used, etc.? What effect do these differences have on the extent to which applicant matching is cost effective?

Clearly, if applicant matching is not cost effective then the resources required to do it should be placed elsewhere. For example, State and local agencies can choose to increase their emphasis on other error reduction strategies such as monthly reporting, improved intake interviewing techniques, more training for eligibility workers, etc. But if it is cost effective, then it is important to learn more about the circumstances that produce the greatest gains. In this way, we can provide guidance to program administrators on how best to implement applicant matching systems and procedures.

CONTENTS OF THIS REPORT

The remainder of this report consists of four chapters plus appendices. Chapter Two presents the methodology used to collect the data and to measure the costs and benefits of applicant matching. Chapter Three is a discussion of the development, organization and "front line" operations of

Table of Contents

applicant matching. Chapter Four presents the costs and benefits of applicant matching and how these are affected by operational differences. Chapter Five summarizes the major findings and conclusions. Appendix A provides copies of the data collection instruments used to measure the costs and savings associated with applicant matching. Appendix B are technical assistance materials for use by State and local administrators. Appendices C through K are the individual site case studies.

Table of Contents

CHAPTER TWO

STUDY METHODOLOGY

The purpose of this chapter is to describe the procedures used to collect and analyze the data for this study. The discussion is divided into three parts: site selection, data collection procedures, and, estimating savings and costs.

SITE SELECTION

This study was intended to be an exploratory effort. Because of the lack of prior research on applicant matching, FNS believed that an in-depth study of a small number of sites would be both more informative and would permit the collection of detailed information about the costs and benefits of verifying applicant data prior to certification. Rather than a broad cross-sectional picture of the current state-of-the-art, our objective was to describe a small number of relatively experienced operations and to identify how these systems might be successfully duplicated in other locations.

Consequently, the selection criteria for study sites was not intended to produce a nationally representative sample of Food Stamp Program operations. Instead, we tried to identify and recruit sites that: appeared to be operating reasonably effective systems; could provide information on the costs and savings associated with applicant matching; and, of course, would cooperate with our data collection efforts.

To qualify for inclusion in the study it was, therefore, first necessary that sites have applicant-matching systems that could successfully avoid the overpayment of public assistance benefits. This required, that computer matching results be returned in time to be used in the eligibility determination process. Next, it was necessary that sites have a minimum range of data sources that they used in applicant matching, including wages, UI benefits, and program files to check for duplicate participation. However, it is important to emphasize that these data sources were only a minimum criterion, and every effort was made to include sites that used a wide variety of data sources in their matching activities. Finally, it was critical that the study could be effectively conducted at the study site. Consequently, it was important that the sites be willing to cooperate and be sufficiently large

to process enough applications during a four to six week period to allow us to reliably measure the costs and benefits of applicant-matching.

Using these criteria, 27 sites were initially identified, based on recommendations from FNS Regional Offices plus data on applicant-matching systems available from the ongoing Food Stamp Program Operations Study (see page 8). Most of these sites were contacted to collect more information about their operations and to gain the approval of State and local administrators to include them in this study. On the basis of these contacts, nine sites were finally selected:

- Arizona - Pima County (Tucson);
- Delaware - Kent County (Dover);
- Georgia - DeKalb County (Atlanta);
- Kansas - Wyandotte County (Kansas City);
- Missouri - St. Louis County (St. Louis);
- New Jersey - Hudson County (Jersey City);
- North Carolina - Wake County (Raleigh);
- South Dakota - Sioux Falls; and,
- Tennessee - Knox County (Knoxville).

These sites cover a wide range of settings. At the State level, the food stamp caseloads range from 190,000 in Georgia to about 11,000 in Delaware; county caseloads vary from about 13,000 in Hudson County, New Jersey to about 2,000 in Kent County, Delaware. Food Stamp payment error rates also vary extensively from a low of about 3 percent in Delaware to a high of almost 14 percent in Arizona.

The sites included in this analysis, although not a large random sample, do represent a reasonable cross-section of Food Stamp Program operations. While the sample cannot be used to estimate national characteristics with statistical precision, the sites are sufficiently different to provide a good picture of how applicant matching works in mature systems and the extent to which it is more, or less, cost effective.

Table of Contents

DATA COLLECTION

As previously discussed, there were four major objectives of this study:

- to identify and describe operational procedures in selected State and local settings that are characteristic of applicant matching systems;
- to identify and estimate the potential savings from applicant matching systems;
- to identify and estimate the potential costs of applicant matching systems; and,
- to disseminate these findings in the form of technical assistance to the States.

The types of data needed to meet these objectives and how they were collected are described below.

Describe Operational Procedures

Teams of two researchers visited each of the nine sites for a period of five days. In addition to implementing the procedures necessary to collect the cost and benefit data (see following discussion), these site visits provided an opportunity to interview State and local staff responsible for applicant-matching activities. Typically, these interviews included meetings with agency directors/administrators, financial officers, data processing staff, and eligibility workers and their supervisors. Information was collected regarding the:

- development of the systems and procedures in use for applicant matching including planning and implementation steps, costs, problems encountered and how they were resolved, facilitating factors, and future plans;
- types of data sources used to verify applicant-reported information, how these data are screened in the matching process, the specific data that are available on individuals from these sources, and the strengths and weaknesses of the different databases;
- computer systems used to support applicant matching including hardware, software and communication networks;

Table of Contents

- procedures used to certify applicants for food stamp benefits and how computer verification is used in this process including when it is done, who does it, how discrepancies are resolved, and the extent to which matching data are accessible to eligibility workers;

- systems and procedures used to ensure the security of both applicant-reported information and data from external data sources used to verify individual information; and,

- effect of applicant matching on payment errors, the deterrence of misreporting and office productivity.

To augment the staff interviews, we also reviewed available documents such as forms, procedure manuals, and planning documents and we obtained program statistical data on public assistance caseloads. Eligibility workers in the local offices also walked us through a typical application process with particular emphasis on the computerized verifications that were done. This last step was especially useful as it gave us an opportunity to see first-hand how computer matching was used in the certification process.

Estimate Potential Savings

In addition to interviewing State and local staff, the on-site visits were used to put in place the procedures needed to measure the costs and savings associated with applicant matching. This involved tailoring our data collection forms[19] to coincide with local procedures and recordkeeping systems and training eligibility workers. As will be described below, we depended a great deal upon local staff to keep track of the time spent on activities related to applicant matching and to help us calculate changes in benefits that were attributable to the receipt of match data. Consequently, we provided each worker with a detailed manual describing the study, the forms and what they were being asked to do during the data collection period. This manual was augmented with a training session that was held for all workers and their supervisors at each of the selected local offices. This provided an

---

[19]Copies of the data collection instruments are provided in Appendix A.

opportunity for staff to ask questions and for the site visit teams to emphasize the importance of keeping accurate records.

As will be discussed later in this chapter, the potential savings associated with applicant matching are of two types -- benefit savings from reduced overpayments to eligible applicants and avoided administrative costs from denying benefits to ineligible individuals. In both situations, the savings are related to the effect of applicant matching on individual households. Therefore, to estimate these savings we collected information from the case files of every applicant household at each of the nine study sites over a period of from four to six weeks following our site visit (this provided information for an average of about 280 applicants per site).

The case file information collected by our data abstractors included applicant-reported data about household composition, earned and unearned income, and liquid and non-liquid resources used to determine eligibility for food stamp benefits. We also collected the final detailed financial information used by the eligibility workers to determine the applicant's actual entitlement, if any, and information on each member of the food stamp household including age, gender, citizenship, employment status, institutional status, case affiliation (PA, NPA), and relationship to applicant and head of household.

For each database used in matching at a particular site, the record abstractor also noted whether a match was attempted and if a hit was found. In cases where there was a difference between information reported by the applicant and that used to determine benefits, the eligibility worker was consulted to determine if such differences were a result of the computer matching activities.

The collection of these data from case records required the data abstractor to visit the local office on a frequent basis. During the first four to six week period, the office receptionist identified new applicants from logs usually maintained at the front desk and the abstractor collected information on household circumstances initially reported by the applicant. Later, as certification decisions were being made, the abstractor recorded which data were verified by a computer screening procedure by checking screen prints or notations made by office staff on the application forms. (During the training session, workers were told to be sure to indicate which matches

Table of Contents

were done for an individual applicant.) Next, the abstractor established the effect of these verifications on program eligibility and benefits, and collected information related to the final certification decision including verified household circumstances, food stamp and AFDC benefits, and the certification period.

In addition to the case-level data two other types of information were collected from State and local staff. Average administrative costs were needed to estimate the savings associated with cases denied benefits due to applicant matching and average Medicaid benefits were needed to estimate these program savings. These will be discussed in a subsequent section of this chapter.

For the most part, data related to the potential savings derived from applicant matching were obtained from case records. While most of the information was collected with few problems, three aspects did cause some difficulty: obtaining an adequate number of cases for our analysis; determining whether a particular match was done for each case; and, where applicant-reported information was changed, determining whether the change was a result of computer matching.

With regard to the first item, Exhibit 2 presents the total number of applications received by each site, the number that did not reach final eligibility determination (either the individual failed to return for an interview or otherwise failed to comply with administrative requirements such as providing various documents, or voluntarily withdrew his/her application), and the number of cases that were eventually used for analysis. These excluded cases could not be used in our analysis as they lacked final information on the applicant's circumstances.

Our original design for this study called for approximately 300 applications to be used for the analysis of savings and costs at each site. This number was calculated using the binomial approximation[20] to estimate the

Table of Contents

EXHIBIT 2: NUMBER OF APPLICATIONS RECEIVED AND USED FOR ANALYSIS BY SITE

State	Number Applications Received	Number of Administrative Denials and Voluntary Withdrawals	Number of Cases Used for Analysis
Pima County, Arizona	366	100	266
Kent County, Delaware	304	40	264
DeKalb County, Georgia	394	190	204
Wyandotte County, Kansas	361	153	208
St. Louis, Missouri	343	35	308
Hudson County, New Jersey	384	25	359
Wake County, North Carolina	361	13	348
Sioux Falls, South Dakota	256	36	220
Knox County, Tennessee	315	9	306
Totals	3084 (100%)	601 (19.5%)	2483 (80.5%)

detecting a savings to cost ratio greater than one. The estimates were also based on various assumptions about the expected percent of cases affected by applicant matching and the associated savings and costs. Although the final dataset contains an average of 276 cases per site, three sites fell substantially below our original goal of 300 cases per site -- DeKalb County with 204, Wyandotte County with 208 and Sioux Falls with 220 cases. The reasons for this shortfall are different for these sites.

First, DeKalb and Wyandotte Counties had a rate of administrative denials and voluntary withdrawals that was much higher than we expected prior to starting our data collection. While some of these withdrawals may be a response to computer matching, i.e., a deterrence effect, local staff were inclined to believe that most of this was due to the program in general. For example, we were told in DeKalb County, that many people initially believe they are poor enough to apply for public assistance but then realize otherwise after their first contact with the welfare office. As reported by local staff, the level of denials and withdrawals was not unusual for either of these sites so we have no reason to believe that it has caused any systematic bias for our analysis. The situation in South Dakota was, on the other hand, a result of a downturn in the rate of applications for benefits. Even though we extended the period for acquiring new sample cases, we were unable to obtain 300 cases within the available time frame.

Despite these smaller than anticipated samples in three sites, we consider the total number of applications examined to be adequate for the purposes of this analysis; the difference between an average of 300 applications and our average of 276 has no significant effect on the reliability of our overall estimate of the ratio of savings to costs. For the three sites having the shortfall, the power of the estimated site-specific ratios is reduced to 85 percent which is still statistically acceptable.

We have no reason to believe that increasing the sample sizes would have significantly altered our basic conclusions. The applicants for whom we collected data are, as for as we can tell from conversations with local staff, not systematically different from the types of applicants usually found in these offices. There are, of course, episodic variations that can occur (e.g., the closing of a major plant in the area) that will affect the types of applicants that are seen (and, as a result, the effectiveness of applicant

matching) but these cannot be captured without a more extensive longitudinal study. Because, as will be discussed in Chapter Four, the number of cases affected by applicant matching is so small, a marginal increase in the sample size would be unlikely to have a significant impact on our estimates of the costs and benefits of applicant matching.

With regard to the second item, match attempts were typically identified in case records by either the presence of screen prints showing the results of a particular verification or by annotations on application forms. Although local office staff were generally conscientious in recording this information, it was likely that some match attempts were not identified. However, we do not believe that this occurred very frequently. As a result, our estimates of the cost of initial screening may be only slightly underestimated.

The last area is related to where to draw the line between applicant-matching activities and those associated with regular verification. That is, for the purposes of this study we need to establish the counterfactual situation, "What would have been done in the absence of applicant matching?" In other words, we must decide what costs were incurred solely because of applicant matching and to distinguish between changes in benefits that result from applicant matching and those that result from regular verification activities undertaken by eligibility workers.

In most instances, making these distinctions was straightforward. Screening client information on the computer terminal and following up with the client if a discrepancy was found were easily identifiable as related to applicant matching. Other situations, however, were not as clear as, for example, when the match information provided a "lead" that prompted the eligibility worker to explore another area of reported information. In these situations, we depended upon the individual eligibility workers to help us make the necessary attribution by asking, "Would you have done this, or obtained this information, in the absence of computer matching?" If the answer was yes, then the activity or the discrepancy was not considered a part of applicant matching.

This decision was, in some instances, a difficult distinction to make even with the help of caseworkers. Therefore some errors may have occurred in the allocation of costs and savings but, we lack quantitative

measures of the incidence of such occurrences. This problem is inherent in measuring any activity that is an intricate part of a larger function, in this case the overall process of determining an applicant's eligibility for food stamp benefits. Our best guess is that eligibility workers would, when in doubt, have attributed changes to their regular verification activities rather than to applicant matching. This may have, as a result, caused some degree of underestimation of savings.

Estimate Potential Costs

As will be discussed later in this chapter, for the purpose of this study we focused only on the operating costs of applicant matching. Information on three types of operating costs were collected: the labor used to match applicants against various external data sources; the labor needed to review the results and to resolve any discrepancies that were found; and, the cost of the necessary computer transactions. (The forms used to collect these data are also provided in Appendix A.)

The staff time required to match applicants against the various databases was measured by means of time motion studies in those situations where it was done for a batch of applicants at one time (where it was done on a discretionary basis, the time was recorded on a job ticket described below). Because these repetitive tasks usually involved short time periods, this approach was the most efficient way to measure these costs. For each database used for applicant matching, field staff determined the activities that constituted the matching function and, using a digital watch, timed these functions for about one hour. In addition, we recorded the type of staff performing the screening, as well as the number of individual applications that were screened. The first item allowed us to associate the correct wage rate with each function; the second item was used to calculate an average cost for each database. To avoid bias, the time motion studies were repeated at least four times at each site over a period of about two months.

In contrast to batch matching of applicants, the staff time required to review match results, resolve discrepancies, and record the time required to do other types of matching was measured on a case specific basis using a job ticket attached to the case record of each applicant. On this form, eligibility workers were asked to record the amount of time they spent

performing activities associated with applicant matching.[20] They were also asked to provide a brief description of the activity performed (e.g., motor vehicle screening, a phone call to an employer), the amount of time they spent doing it, and the date. It was also noted if the function was performed by someone other than the eligibility worker. The time data on this form was then summed by data source for each type of worker involved.

For both types of labor, the time expended was converted to dollar costs by multiplying by both the wage rate (including fringe benefits) for the type of worker performing the various activities and an adjustment to account for overhead costs (see discussion later in this chapter). Information on wage rates, fringe benefits and overhead costs were obtained from appropriate State and local staff.

Our ability to measure each of the two types of labor costs -- initial matching and follow-up -- was, however, not the same. To begin with, the time required to conduct the initial matching of applicants was, as noted above, generally obtained by means of time motion studies. Because these measurements were taken by our own staff and involved simple repetitive tasks we are confident that the estimates are both accurate and consistent from site to site. In addition, the use of repeated measures and averaging across many applications tends to produce a more reliable estimate of the resource costs. The only problem that may have an effect on the estimates was, as previously discussed, the chance that some matches were not recorded in case records.

On the other hand, measuring the cost of reviewing match results, following-up on discrepancies and performing certain discretionary computer matches depended upon eligibility workers recording the tasks that were done

---

[20]Reviewers of this report noted two types of activities that were excluded from these measurements: discussions eligibility workers may have had with their supervisors regarding match results; and, any time spent during instances of computer downtime. With regard to the former we don't believe this to be of sufficient magnitude to be of concern as it is a relatively infrequent occurrence. With regard to the second, downtime was also very infrequent. And, because workers had other things to do in the meantime, to have added this time to the cost of applicant matching would have, in our view, overstated the effect of downtime by attributing all of this cost to one office function.

and the time required to complete them. Although we conducted training sessions for all intake workers at each of the nine sites, and although these workers responded seriously to our instructions, it is very likely that some activities were not recorded or that the times of reported activities were mis-estimated. First, the incidence of discrepancies detected through applicant matching was quite low. For the majority of applicants either a match was not found or the information obtained simply confirmed that reported by the applicant. Therefore, because the effort required for an individual application was so small we expect that some workers simply forgot to record their time.[21] Fortunately, on the basis of those cases where complete data were measured we know that this unrecorded time is quite small. For example, the time required to verify an applicant's report of no wage income with a screen print showing no employer-reported wage data is only a matter of seconds.

Second, for those cases where a discrepancy was found, the time required to resolve the problem was generally brief because the burden of proof was typically placed upon the applicant. This activity usually entailed discussing the discrepancy with the applicant and reviewing any supporting documentation he/she could provide. Conversations with local staff seemed to confirm our belief that following-up on match data did not require very much effort. In these instances, eligibility workers generally recorded their time but it is likely that this recording was not perfect. But because the number of cases with discrepancies was samll (see Exhibit 6, page 64), the total amount of time that could have been missed was also probably small.

The final cost component, computer costs, were by far the most problemmatic. Our original plan was to obtain these costs from State (and, where appropriate, local) data processing staff. However, as we learned many governmental computer systems (including those represented in this study) do not have accounting procedures capable of disaggregating the cost of specific

---

[21]We did not conduct an independent verification of worker time records. In some instances our data abtractors could identify missing information (e.g., if a match was noted as having been done but no time was recorded) and request that the worker estimate the time spent and enter the information on the time log. But, as far as we can determine this did not occur very frequently.

transactions such as individual screen(s) used for applicant matching or portions of batch jobs. Therefore, the level of cost detail required by our analysis was generally not directly available from the sites. Some of the more newly developed systems did approach the necessary detail, but even these could not fully disaggregate applicant-matching tasks from the usual application processing tasks.

The best information we could obtain from most of the sites were average costs for input/output transactions, i.e., the cost of telecommunicating database inquiries between a remote terminal and a central mainframe computer. Such costs averaged about 2.5¢ per screening transaction. This estimate, however, excludes unit usage charges for CPU time, disk storage and access as well as a myriad of other processing and peripheral charges. And is, therefore, a lower bound estimate of the costs of the necessary computer operations.

Lacking a way to obtain a more complete estimate directly from the States we investigated the use of the fair market value of computerized data acquisition as a proxy for actual State computer processing costs. Many public and private sector databases are now available to persons with microcomputers via timesharing networks. The information management services systems that support these databases, or provide access to private data, charge for information accessed by visual display or hardcopy printout. Consequently, we were able to obtain and average the charge per display record, typically one screen of information, for 70 different data bases. The result was $0.26 per screen.

Actual costs probably lie somewhere between these two cost estimates. The lower bound estimate excludes certain cost elements that should be included (e.g., the cost of maintaining the on-line databases) while the upper estimate may include some unnecessary costs (e.g., marketing costs and profit). Because we are unable to determine an appropriate middle value we have chosen, for the purposes of our analysis, to use the higher market value estimate. It is certainly the most conservative assumption as it increases the estimated costs of applicant matching and lowers the savings to cost ratios. But given our uncertainty, this more stringent test involves less risk. It also provides, to some extent, a means of offsetting some of the underestimated labor costs previously described.

ANALYZING COSTS AND SAVINGS

This final section focuses on our estimation of the costs of conducting applicant matching and the savings that are derived from this investment of resources. After some preliminary comments, the discussion is divided into three parts: a review of the specific measurement methodology used to measure the savings gained from applicant matching; a review of the methodology used to measure the associated costs; and, combining the two to form a savings to cost ratio.

Analyzing costs and savings is, on the face of it, a rather staightforward proposition. All one has to do is to measure the costs of a particular activity and how much is saved by doing it and combine the two figures to get a ratio. This ratio then tells how much money is saved for each dollar spent on whatever the activity is that is being studyed. Unfortunately, it is not quite as simple as it sounds.

To begin with, it matters from whose perspective you measure the costs and savings -- clients, government or society as a whole. Depending upon the choice made, one can end up with much different assessments of what are costs and what are savings. For example, if applicant matching reduces overpayments, government realizes a savings but the affected individuals may experience a cost (i.e., a possible reduction in benefits and/or the cost of providing additional documentation in response to a match produced discrepancy).

Because one of the objectives of this study is to address costs and savings from the perspective of government, we have ignored certain costs and savings that are associated with computer matching including: costs borne by "third parties" such as employers who may be asked to verify discrepancies between client-reported information and match results; costs imposed on applicants as a result of having to provide supporting documentation in response to a detected discrepancy; and, costs to individuals who are eligible for benefits but who are deterred from applying because of computer matching. However, to the extent possible, we have tried (in a later chapter) to provide some information on these other aspects.

It is also important to note that there are important distinctions among different levels of government. States and local agencies realize

savings in administrative costs for those applicants found ineligible by applicant matching and, if payment errors are reduced enough, such verification may help them avoid sanctions for excess error rates and possibly qualify for increased Federal administrative funding. On the other hand, the associated savings in transfer payments largely accrue to the federal government. Finally, because of administrative cost-sharing arrangements, the costs of conducting applicant matching are shared between State and local agencies and the federal government.

Estimating Savings

As mentioned earlier, we focused on two types of savings that could be attributed to applicant matching -- reduced transfer payments and administrative costs savings. The first consists of food stamp, AFDC and Medicaid overpayments that are avoided as a result of applicant matching while the second consists of avoided administrative expenditures achieved by preventing ineligible households from receiving benefits altogether.

Transfer payment reductions, the most directly measurable savings from applicant matching systems, are equal to the difference between the payments that would have been provided in the absence of computer matching and the actual payments provided to the applicant. The magnitude of this difference is affected by two factors: differences in the information used to calculate entitlements at the time of application; and, the length of time the recipient would be expected to receive any overpayments before the error was detected through some other means (e.g., recipient matching and recertification). These calculations were done on a case-by-case basis for each data source used for applicant matching at each site. For example, wages may be verified quarterly but a screening of motor vehicle records is typically not done until recertification. The sum of these savings across all databases for a particular case equals the total transfer payment-savings attributable to that case. The sum across all cases for a particular database equals the payment savings associated with its use in applicant matching. Finally, the sum across all cases and databases equals the total savings in transfer payments attributable to applicant matching at a particular site.

The first step, in this process was to determine whether the match against a particular data source could have affected the applicant's food stamp benefits. This involved the following steps:

Table of Contents

1. A determination of whether the particular match was attempted (not all applicants are screened against all available data sources) and, if so, a determination of whether a match or "hit" was found. If not, savings from this source is equal to zero.

2. A determination of whether the hit produced information different from that reported by the applicant (a "discrepancy hit"). Again, if not, savings are equal to zero.

3. Finally, a determination of whether the discrepancy led to a change in the particular data item from what the applicant reported. These are what we have chosen to call "benefit impacting hits".

Once it was determined that matching against a particular data source led to information different from what the applicant reported, the next step was to compute the effect of this difference on food stamp benefits. To do this, we calculated the applicant's eligibility for benefits under two situations: (1) using the local Agency's final values for all of the data elements relevant to the determination of the household's entitlement (i.e., the benefit level for which the household is actually eligible); and, (2) the same values for all data items not affected by the particular match plus the applicant's originally reported value on the discrepant data element. The difference between these two benefit levels, represented the change in food stamp benefits due to the matching of applicant data against a particular database.

In addition to considering changes to food stamp benefits, we also included changes in AFDC and Medicare benefits; however, these computations were more problematic. With regard to AFDC, because we collected information related to the food stamp case we could not compute changes in AFDC benefits directly, i.e., the assistance units were generally different. Consequently, where information was changed as a result of applicant matching for households containing AFDC beneficiaries, we asked individual eligibility workers to calculate the before and after benefits for us. This also ensured that the calculations reflected the AFDC rules in effect in the different States.

The difficulty with Medicaid is that it is not an entitlement program with fixed benefit levels. Individuals eligible for cash assistance

from AFDC are automatically eligible for subsidized medical services. Use of these services, however, depends upon a client's need for health care. This has two consequences for how we computed medicaid benefit saving. First, we assumed that applicant matching could only affect Medicaid benefits if the individual was determined to be ineligible for cash assistance.[22] And second, the amount of the lost benefits could not be known in advance. Our approach, therefore, was to attribute a value equal to the average monthly Medicaid benefits for each individual State for each public assistance case determined to be ineligible as a result of applicant matching.

Once we determined the average monthly transfer benefit savings attributable to applicant matching, the next step was to estimate the average number of months that would elapse before the applicant's reporting error would be discovered through some other agency action such as recipient matching and recertification. For a given case, we considered this duration of benefit savings to be equal to the lesser of three time periods: (1) the time to recertification, i.e., the appropriate food stamp certification period; (2) the time between initial certification and the next scheduled case verification action that would uncover the error; or (3) the average monthly spell on the program for clients with similar characteristics. The last time period accounts for those clients who leave the program (either voluntarily or through administrative action) prior to the first two events. But, because average program spells have been found to exceed the first two time periods,[23] we chose to ignore this factor in our analysis.

For discrepant data items that are only matched at recertification, such as county property records or motor vehicle records, the relevant duration of time is simply the assigned certification period. For data items that are screened as part of a regularly scheduled match of active cases, such as monthly wage match or quarterly SDX or BENDEX matches, the relevant period is the time that is expected to elapse before the case would be included in

---

[22]Assuming that cases denied AFDC benefits would not receive Medicaid benefits may have introduced some slight overestimate of savings if any of these individuals applied for, and subsequently received, benefits under a State's medically needy option.

[23]Nancy Burstein, Short-Run Dynamics of Food Stamp Receipt: Descriptive Analysis. Cambridge Mass.: Abt Associates Inc., July 1987.

the next computer match plus the time required to follow-up on any discrepancy and adjust the client's benefits accordingly.[24]

Avoided administrative costs are the second source of benefits that can be attributed to applicant matching. But, such cost savings only accrue for those cases determined to be ineligible as reducing benefits to eligible households has no effect on the cost of ongoing case management. In this situation, applicant matching prevents the case from getting on the rolls and absorbing administrative time and expenditures. However, actually measuring the magnitude of these avoided costs in a way that is meaningful to local welfare offices is difficult.

Administrative costs are associated with all aspects of the Food Stamp Program including issuance, recertification, ongoing computer matching, monthly reporting, job search requirements, Quality Control review, claims collection, and fraud prosecution. In a broad sense, the extent to which applicant matching changes what it would have otherwise cost the agency to handle the case is a cost savings. Such administrative costs, as they occur over time, are of three types: those associated with actions that affect most cases, such as issuance and recertifications; those associated with actions that affect particular types of cases, such as monthly reporting and job search; and those associated with actions that affect cases subsequently found to be in error, such as claims collection (including recoupment) and fraud prosecution. Thus, the magnitude of any administrative costs savings is related to the probability that a case found to be in error through applicant matching would be subjected to each possible administrative action, multiplied by the cost of performing each activity. The total savings would then be the sum of all of the individual expected values.

The problem in calculating administrative costs is obtaining the data needed to make the necessary calculations, both of the cost of a given administrative action and of the probability that this cost will be incurred for an individual error case identified through applicant matching. Lacking such information, we opted to consider administrative cost savings in the

---

[24]We have assumed that a match will be done at recertification if it is available. This may cause some slight upward bias if caseworkers actually fail to do a particular match at that time.

Table of Contents

aggregate. This was done by multiplying the number of case months of work saved by the applicant matching system (i.e., the amount of months over which benefits were not paid due to discrepancies in application data discovered by the applicant-matching system) by the average administrative cost per case per month for cases in each of the respective States.[25] This latter figure was obtained by simply dividing the average monthly State administrative expenditures by the total number of cases in the State (both data elements were provided by the individual States). As with transfer payment savings, total administrative cost savings can be calculated for an individual case, across cases for a particular database, and across databases for a particular site.

The total savings, then, at site j, $S^T{}_j$, is the sum of administrative cost savings, $S^{AC}{}_j$, and savings in transfer payments, $S^B{}_j$, as shown below:

$$S^T{}_j = S^{AC}{}_j + S^B{}_j$$

Where S^B_j, the sum of the benefits saved for case i at the jth site, is determined by two factors. The first is the amount saved each month, b_{ij}; the second is the number of months for which the amount is saved, t_{ij}:

$$S^B{}_j = \sum_i b_{ij}\, t_{ij}$$

For the ith individual case at the jth site:

$$b_{ij} = \text{monthly benefit savings}$$
$$= b^A{}_{ij} - b^F{}_{ij}$$

---

[25]Reviewers noted two points regarding this use of average administrative costs. First, cases found to have discrepancies probably require higher than average costs if allowed on the program. We cannot, however, obtain a finer breakdown by type of recipient household. (It should be noted that a study currently underway by Abt Associates of Food Stamp certification costs will help address this problem, but these data will not be available until the Fall of 1988.) Second, for those sites still developing their matching systems, the average administrative costs we used probably includes some of these expenditures.

Table of Contents

b^A_{ij} = monthly benefits without matching.

= $FS^A_{ij} + AFDC^A_{ij} + MED^A_{ij}$
(the sum of the monthly food stamp, AFDC and Medicaid benefits)

b^F_{ij} = monthly benefits with matching.

= $FS^F_{ij} + AFDC^F_{ij} + MED^F_{ij}$

t_{ij} = estimated months for which overpayments are expected to be paid.

= MIN $\begin{cases} \text{Months until recertification.} \\ \text{Months until data would have been found as part of} \\ \text{normal case review.} \end{cases}$

And, where S^{AC}_j, the total savings in administrative costs resulting from applicant matching, is the sum of the administrative costs saved in each case. As with benefits saved, administrative costs saved are a function of the amount saved each month and the number of months for which overpayments are avoided. These savings for case i at the jth site are determined by two factors. The first is the amount saved each month, ac_{ij}; the second is the number of months for which the amount is saved, t_{ij}, defined above.

$$S^{AC}_j = \sum_i ac_{ij}\, t_{ij}$$

where for the ith individual case at the jth site:

ac_{ij} = monthly administrative cost savings

= $\begin{cases} ac_j & \text{if individual i is denied food stamps, the average cost of administering a case at site j.} \\ 0 & \text{if individual i is ceritified.} \end{cases}$

For cases denied because of applicant matching, the entire estimated cost of administering the case is counted as an administrative cost savings. If the match data only affects the amount of the award and not eligibility, there is no administrative cost savings.

Table of Contents

Estimating Costs

Costs associated with applicant matching can first be differentiated between the cost of developing and implementing the required computer systems and databases and the costs of operating the systems once they are established. For the purposes of this study we have chosen to focus only on operating costs for the following reasons:

- Development costs were extremely difficult to identify particularly when, as in all of the sites

Table of Contents

Our focus, then, is on incremental or marginal costs, i.e., the costs of conducting applicant matching given that the necessary systems are already in place to access the desired data sources. These costs consist of the direct cost of labor and non-labor resources (i.e., computer costs) and indirect costs (i.e., overhead and general administrative expense).

The total cost of applicant matching for the ith individual case at the jth site is equal to:

$$C^T_{ij} = [\sum_m t_{mj}\, p_{mj}\, I_{im} + \sum_f t_{fj}\, p_{fj}]\ A/P + \sum_m c_m\, I_{im}$$

Where,

t_{mj} = the average time spent on the mth matching activity at the jth site, as determined by the time motion studies.

p_{mj} = the average hourly wage rate for the staff category performing the mth matching activity at the jth site.

I_{im} = Indicator for individual i, showing m^{th} match attempt,

$= \begin{cases} 1, \text{ if match activity m was attempted for case i,} \\ 0, \text{ if m is not attempted for i.} \end{cases}$

t_{fj} = the average time spent undertaking the fth verification follow-up activity at the jth site.

p_{fj} = the average hourly wage rate for the staff category performing the fth matching activity at the jth site.

A/P = overhead rate.

A = total administrative cost of the program, including personnel and operating costs.

P = total personnel costs of operating the program.

c_m = the average computer cost associated with the mth matching activity.

The total cost of matching activity at site j is the sum of the costs of the matches for all the individuals at the site.

This algorithm first takes measures of staff time spent to conduct different applicant-matching activities for a particular case and multiplies these times by the appropriate wage rate of the workers responsible for each

Table of Contents

activity. After summing across all of the required actions, the resulting staff cost is next adjusted upward to account for indirect costs (i.e., the ratio A/P). The final part of the algorithm adds the cost of the necessary computer transactions to the cost of direct and indirect labor.

Savings to Cost Ratios

The final aspect of this analysis involved the use of a summary measure called the savings to cost ratio. Each ratio indicates the dollars returned in savings per dollar expended to achieve the savings. A ratio that is greater than one indicates that the program returns more in savings than it costs. It should be noted, however, that as previously discussed, if one were to consider the distribution of savings and costs to each of the several parties actually involved (potential recipients, society, the Federal Government, State and local governments), quite different ratios would result. The ratio of savings to costs to the different levels of government will vary depending on who finances which part of the program (public assistance benefits versus administrative costs).

SUMMARY

Nine sites were selected for inclusion in this study. Although not a nationally representative sample, the sites are diverse enough to provide a good picture of how applicant matching works in relatively mature systems.

The data for this study consisted of a combination of individual level data about a large sample of 2500 applicants for food stamp benefits and in-depth interviews with State and local administrators and staff. The result is a rich source of information that combines the strengths of quantitative measures of the costs and savings of applicant matching with the perceptions, opinions and experiences of those who have developed and implemented these systems.

The savings estimated for applicant matching includes reduced food stamp, AFDC and Medicaid benefit payments and, for denied cases, avoided administrative expenses. Savings were calculated for cases with detected errors and then extrapolated over the period of time the overpayments would be expected to be paid before the misreporting would be uncovered through some other case action (e.g., recipient matching, recertification). Estimated

savings may be somewhat underestimated for two reasons. First, we have not included measures of deterrence effects. Second, we depended on eligibility workers to determine if a detected error was the result of applicant matching rather than regular verification. And, we believe that they may have chosen the latter when in doubt.

The estimated costs of applicant matching consisted only of operating costs -- development costs and fixed costs (e.g., hardware purchases) were excluded from the calculations because of problems both in measuring these costs and allocating them to this one function. These costs included labor time to initially match applicants, labor time to review match results and resolve any discrepancies with the applicant, and computer costs. Estimated labor costs may be somewhat underestimated because we suspect that eligibility workers may have, in some instances, forgotten to record certain activities and/or misestimated the time spent on short episodic tasks. Computer costs, on the other hand, are based on fair market prices and are probably somewhat higher than actual costs in the public sector. Overall, we believe the two types of bias balance out leaving total costs very close to the true value.

Table of Contents

CHAPTER THREE

DESCRIPTIONS OF APPLICANT MATCHING PROCEDURES AT STUDY SITES

The purpose of this chapter is to review the general themes that were found across the nine sites included in this study. This discussion draws upon a variety of sources including the formal interviews with State and local staff, volunteered anecdotes, and the observations and impressions of the site visit team members.

The chapter is divided into four parts: the development of applicant matching systems in the nine study sites including a discussion of some of the reasons why States decided to implement these procedures and important facilitating factors; the role of applicant matching in the food stamp certification process including staffing considerations; the computer systems that are used; and, future development plans.

DEVELOPMENTAL CONSIDERATION

The first obvious question to ask is, "Why do States decide to do applicant matching?" It is not, as discussed in Chapter One, required by federal regulation, and it requires the use of already scarce resources. They must either perceive it to be an investment that will return savings that significantly exceed the costs or something that is relatively easy and inexpensive to implement.

While concerns about fraud and abuse in public assistance programs support the use of computer verification, the potential for reduced overpayments does not appear to have been the most important reason for extending computer matching to applicants. Rather, our discussions with State and local staff in the nine sites we visited suggest that technological developments and related regulatory changes have been the most important reasons for the increased use of these systems and procedures.

In recent years, States have moved to upgrade and expand their general data processing systems. The technological explosion in the computing industry over the last decade has resulted in vastly improved hardware and software and decreasing data processing costs. Consequently, States have seen investments in this area as one way of improving the long term efficiency of

government operations thereby allowing them to either expand program services or reduce expenditures.

With regard to public assistance programs, this movement to improve recordkeeping systems was further facilitated by a joint effort of the Departments of Health and Human Services and Agriculture to encourage States to design and implement sophisticated Financial Assistance Management Information Systems (FAMIS). More importantly, if a State developed an automated case management system that met FAMIS requirements (approval by both Departments was required) they could receive major financial support from the Federal government. The Department of Health and Human Services (DHHS) would reimburse the State for 90 percent of the development costs allocated to the AFDC and Medicaid programs while the Food and Nutrition Service would reimburse 75 percent of the cost allocated to the Food Stamp Program.

This favorable funding situation encouraged many States to develop automated systems that, for the most part, form the basis for much of what is currently done to verify client-reported information. The automated systems provide the network to link local offices to a central mainframe computer, the terminals used by local office staff to input client data and to make inquiries on various databases, and the capability to retain large amounts of information on current and past clients.

In addition to factors that encouraged the development of statewide integrated computer networks, recent Federal requirements have made available many of the data sources used to verify applicant-reported information prior to certification. Conforming to these regulations has also provided the necessary interagency arrangements needed to access data on applicants. As with the technological advances, the improved availability of external data sources has made it easier to extend the use of computer verification from recipients to applicants. The computer systems were in place for use by local welfare offices, and the data were available in a way that could return information about individuals quickly and efficiently.

Finally, the success of computer verification in other States has also contributed to an environment that supported States' decisions to expand the use of computer matching to cover applicants. But the more important aspect of this diffusion of knowledge is the transfer of automated case management systems from State to State. Rather than developing systems from

scratch, most States have opted to transfer an existing system from another State and modify it to suit the needs of their client population, State regulations, and organizational structure. Recent transfer systems usually came with the capability to do computer matching. As a consequence, once the new system was installed it was relatively easy to implement the procedures necessary to verify client-reported information.

The one conclusion that comes through loud and clear regarding the development of the capability to do applicant matching is that it is surprisingly easy to do once the State has implemented an automated case management system. Any automated system would allow users to inquire into records of public assistance beneficiaries and usually provides the necessary hardware and softwre to communicate between local welfare offices and a central computing facility. This then provides the technical capability to do computer matching as well as access to one of the universally used databases, existing records of recipients of public assistance.

With this structure in place, the addition of other interfaces is relatively inexpensive to implement. The availability of Federal databases such as BENDEX and SDX has been brought about by the matching requirements of IEVS. Providing on-line access to these data is technically simple; the only serious constraint is the capacity of existing hardware to handle the added storage and input/output requirements. But, this is only a problem if on-line access is used. Batch processing can be a viable alternative as long as the match results are made available to eligibility workers in a timely manner.

Access to other State databases (such as motor vehicles, vital statistics records) is somewhat more complicated because of the need to work out the necessary inter-Agency details (e.g., data security procedures, the volume of transactions that can be handled, etc.). But, if the committment to do computer matching is there, State officials we spoke with generally found that these issues can be worked out rather quickly. Having already learned how to establish the necesary inter-organizational linkages in response to IEVS, extending matching to include applicants or to add other data sources seems to have become relatively easy to do. Beyond the necessary coordination, all that is required to establish such interfaces is the addition of some hardware and communication support systems such as controllers, modems, and leased telephone lines.

Even though the general message from the sites was that the development of applicant matching per se was relatively easy to do, some problems have been encountered during the design and implementation of the necessary procedures and support systems. For the most part, respondents focused on general development issues. Although not specifically related to applicant matching, they are worth noting, however, as they are part of the broader system development process:

1. A common complaint was inadequate mainframe computer capacity to handle the volume of cases and transactions required for the automated recordkeeping system. Staff we interviewed suggested that States considering the development of new systems should do a careful study of their computer needs at the outset of the planning process.

2. In some cases, States used the services of consultants to design or modify an existing system for their use. In general, State personnel expressed concerns over the extent to which the consultants had been integrated with their own staff. Too often, after the consultants were done, State staff found themselves faced with the problem of trying to maintain or upgrade a complex system that they did not know very well. One view that was expressed was that "the system was not as turn-key as we were led to believe." For other States planning a similar development process, the respondents recommended the use of a planning schedule that allowed adequate time to phase-out the consultants and phase-in regular staff so they are throughly familiar with the system before it is handed over to the State. In addition, the consultants should work hand-in-hand with State personnel throughout the design, implementation and testing of the system.

3. When switching to a new recordkeeping system one of the biggest problems seems to be the effort required to convert active cases from the old system to the new system (new cases are simply entered into the new system). The one positive side of this activity, however, is that it provides eligibility workers with a great deal of on-the-job training with the new forms and procedures.

4. States have had a difficult time responding to changing Federal requirements for their automated systems (e.g., new requirements for handling claims and collections, IEVS requirements and the new employment and training regulations). Many extant systems (especially the older ones) were designed for a particular purpose and have large amounts of complex programming. This makes it difficult to modify them to perform new interrelated functions within the tight timeframes allowed in many regulations.

Table of Contents

5. At the State level, the increased use of automated systems that link local offices to central computer facilities for on-line case processing has had a significant effect on data processing departments. For example, functions that once involved primarily batch processing, now require staff with new skills in data base management and telecommunications.

6. Large automated interactive systems require the use of standardized procedures statewide. The need to ensure statewide consistency, has tended to reduce local control and discretion and to shift decision making to a centralized State bureaucracy.

7. A similar change has also occurred for local office workers. The automated system has imposed a great deal of structure on their day-to-day activities. Although this has certainly reduced processing errors, as one person put it, the activities of the caseworkers are "now designed to accommodate the computer system."

One organizational decision which seemed to facilitate the development and operation of these automated systems is the assignment of primary responsibility to the State Department that administers public assistance programs (instead of the data processing division). This typically ensured that the system was developed and maintained in a way that was most responsive to the needs of "frontline" workers and their supervisors. Also, the feeling of ownership gained seemed to foster greater frontline commitment to make the system work, as staff felt that their concerns were considered and changes were being made to improve their day-to-day work activities.

In addition to general system problems, staff noted these areas specifically related to applicant matching:

- In some sites, access to and use of State wage records was a problem because individual and employer information were found in separate computer files. The records for individuals provided a unique number for each employer for whom he/she worked during a quarter. To identify the employer, required accessing a separate file. This proved both cumbersome and time consuming.

- In one site, we noted an interesting response to procedures designed to maintain the security of the wage data. Initially, only two individualized passwords were provided to each local office in the State. This restriction was a problem for the eligibility workers who didn't want to have to go to

these two people to get their match results; they were out some days or busy with other tasks which caused delays in processing cases. As one would expect, office staff simply worked around this restriction by sharing the same two passwords. As a consequence, the demand placed upon the mainframe computer on which the data resided exceeded the planned usage and often led to the system going down during hours of peak use (the system is now being upgraded).

- Access to the various databases used for applicant matching is often not integrated. Workers have to either log off one system and on to another to do a complete screening for an applicant or, even worse, shift to an entirely separate terminal to access particular data sources. This was not only time consuming but often provided a disincentive to do certain matches.

- For some databases (e.g., motor vehicle records) the identifier used to match records is the applicant's name. This often produces a long list of match "hits", especially for common names, which must be screened to pick out the desired individual. Again, this is time consuming and deters workers from accessing particular sources of information.

By and large, State and local staff see these problems as solvable. Computer assisted verification of applicant-reported data is an evolving process that is likely to see numerous changes as States gain more experience with it and as they strive to improve their general data processing capability. Some of these planned improvements are discussed at the end of this chapter.

THE ROLE OF APPLICANT MATCHING IN THE CERTIFICATION PROCESS

The purpose of this section is to describe the procedures used for applicant matching in the nine sites included in this study. The focus is on the day-to-day operations in the local welfare offices, from the time the individual enters to apply for benefits to the point at which a certification decision is made.

To be certified for food stamp and other public assistance benefits, applicants must provide information on many aspects of their household's circumstances. Consequently, overpayments can be related to misreporting

errors on a wide variety of data elements. But this does not mean that all of these data items can, or should be, verified through computer verification. In some instances (such as rental income) the data cannot be directly verified by computer matching, while in other cases the number of applicants reporting a particular data item is too small to warrant the expense of creating an automated verification system. There are then four questions that are of interest:

- What databases are most often available to verify applicant information?
- How are these databases used to verify applicant-reported information?
- How well do these different data sources detect discrepancies?
- How do these data sources differ in terms of their cost effectiveness?

The first three are examined here, while the last is discussed in Chapter Four.

What Databases are available to verify applicant-reported information?

As shown in Exhibit 3, there was a great deal of diversity among the nine sites in terms of the number and types of databases that were available for applicant matching. In a few instances, the data were only available on hardcopy records or microfiche. Although the use of these data does not represent computer-assisted verification of applicant-reported data, we have included them here because they were used and could provide information to eligibility workers in time to be considered in the certification process. With the exception of the county records, these data were in all instances available statewide. The following discussion reviews each of these databases.

Public assistance benefit records were used at every site to provide eligibility workers with information about both active and inactive recipients. In some instances, this also included information on pending

Table of Contents

EXHIBIT 3: DATABASES CURRENTLY USED FOR APPLICANT MATCHING BY SITE

	Pima County, AZ	Kent County, DE	DeKalb County, GA	Wyandotte County, KS	St. Louis, MO	Hudson County, NJ	Wake County NC	Sioux Falls, SD	Knox County, TN
Benefit Records	X	X	X	X	X	X	X	X	X
Other State Records									
Own State Wage/UI	X	X	X	X	X	X	X	X	X
Other State Wage/UI				X					
Motor Vehicles	X**	X	X*	X			X		
Vital Statistics		X			X				X
Child Support		X	X		X				
Claims/Collections					X				X
Federal Records									
BENDEX	X	X			X*		X		X
SDX	X*	X			X*		X		X
DRIPS									X
County Records									
Child Support			X						
Property			X	X			X		
Voter Registration			X						
Traffic Court			X						

* Hardcopy or microfiche.
** Telephone call to DMV with matches done every two weeks and returned to local office.

applications. These records, maintained for the purpose of administering public assistance programs (i.e., food stamps, AFDC, Medicaid, and, if available, general assistance to needy adults), were part of sophisticated automated case management systems that not only handled general recordkeeping chores but also calculated eligibility and benefits for applicants, issued client notices, issued and maintained records of benefit payments, implemented "mass changes" to client benefit payments in response to regulatory revisions, and many other tasks that once required large amounts of clerical effort.

Matching against these files is generally done by name. When no match is found, most systems permit the use of "soundex" procedures which searches for names that are similar to that which was originally entered (e.g., Smyth for Smith). Because such searches often produce more than one individual with the same name, other identifying information is used to select the desired person such as Social Security number (SSN), gender, race, and date of birth. Although the exact nature of the information available on these automated systems varies from site to site, they generally include data such as: case number; identifying information for the head of the assistance unit such as name, SSN, date of birth, gender and race; address; dates for application, certification/recertification and key case actions; history of benefit payments; a variety of household information derived from the most recent active case including earned and unearned income, expenses and deductions, assets, etc.; and, information on each member of the assistance unit including personal characteristics and amounts of earned and unearned income. In some instances, these automated systems maintain other information such as results of previous IEVS matches and records of, and claims for, overpayment of benefits (collections and/or recoupment).

When used for applicant matching, these records serve several purposes. First, when a match is found for a particular individual, the case number allows the staff to locate the applicant's previous case records since this number forms the basis of their filing system. If the applicant is recertified for benefits, that same number is used for the new case in order to maintain a system of unique client records. If no match is found, then a new identifier is assigned to the case and to each individual in the assistance unit (these systems typically maintain hierarchical records -- by assistance unit, by type of program, and by individual).

Table of Contents

Second, this match ensures against duplicate participation in any of the public assistance programs for which records are maintained on the system. If an individual is currently active in another case anywhere in the State, the applicant is informed that they must either transfer their case to the office where they have already submitted their application or close that case and open a new case. This makes it impossible for an individual to have two open cases in a particular assistance program at the same time without, of course, using different names and SSNs.

Finally, for individuals who are prior program participants, printouts of case record information give the most up-to-date data on any assistance payments the applicant may have received, on household members in current or previous cases, and on various aspects of the applicant's financial situation, all of which are pertinent to the applicant's new request for assistance.

State wage and Unemployment Insurance (UI) benefit records were also available at every site. These data, collected and maintained for the purpose of administering the States' UI program, consist of two parts: records of UI payments to individuals; and, employer-reported wage records for all individuals employed in the State except those working for the Federal government (including the military) or very small non-profit firms. One site had even arranged to have direct access to the wage and UI files of a neighboring State (this was done only for those counties adjacent to the State border).

Wage data are based on quarterly reports received by the designated State agency, typically the State Department of Labor or Economic Security, from all registered employers the month following the end of the quarter. These data, generally accessed using the individual's Social Security Number (SSN), typically include: name, SSN and address of the individual; total wages received by the individual in each quarter (data are usually available for a fixed historical period, typically the preceding five to eight quarters); name and address of each employer from whom the individual received wages (in some instances, this information is available in a separate data file which must be accessed after a match is found on the wage file); and, the wages received from each employer by quarter.

Table of Contents

In contrast, the **UI data** are the State's own internal records of benefit payments to individuals and are available soon after the completion of a transaction. These data are also accessed by the individual's SSN and typically include: name, address and SSN of the individual; current status regarding eligibility for, and participation in, the UI program; and, duration, dates and amounts of UI claims. Typically, these data cover a period of about a year -- all payments made to an individual during this time are recorded on the system.

State motor vehicle records are also used in applicant matching. These records of all motor vehicles registered in the State are generally maintained by the State Department of Motor Vehicles (DMV). Three of the nine sites had available on-line access to DMV records. One site submits requests for information to DMV by telephone. Matches are run every two weeks and returned to the requesting welfare office for use in the certification process. A final site provides local welfare offices with hardcopy printouts of DMV records.

The typical database consists of a listing of all vehicles registered to a particular individual or organization. The information available includes: name and address of the owner/lessor of the vehicle; make, model and year of the vehicle; title number; and, the associated tag and operator license numbers. These data are typically accessed by the applicant's name rather than SSN and are, therefore, problemmatic. (It is also possible to search by tag or vehicle number but because this information is rarely known to the welfare office it is not done; the only instance is when a home visit is made and cars are found at the residence.)

Another source of State-level information used is **vital statistics records**. These records are generally available from the State Health Department and represent the birth and death records of all individuals who have been born or who have died in that particular State (i.e., the records provide no information on individuals who were born or died in another State).

Two of the three sites using these data were only accessing birth records -- no use was being made of death records. One site used the on-line system to confirm births and deaths which were relevant to an application. Vital statistics records are typically accessed by the first and last name.

Table of Contents

already in the system. This information is written to a computer tape and returned to the State (usually within two to three weeks) where it is then used to update the State's BENDEX records.

The information returned on each individual includes: name, SSN, gender and date of birth; identifier of individual on whose earnings benefits have been paid; initial entitlement date; payment status code, last transaction date and amount of payment; and, information on entitlement for other SSA programs -- Medicaid, Railroad Retirement and Black Lung. Matches are done by the individual's SSN.

In this study, five sites used BENDEX data to verify applicant-reported information. Four of the sites provided eligibility workers with direct on-line access to BENDEX data while one site made this information available to local offices on microfiche.

Because the BENDEX data used by States are built from a match of active recipients of public assistance with SSA's beneficiary files, the information available to eligibility workers only covers individuals who are current or recent program participants. First time applicants will never show up on the BENDEX files in time for applicant processing. In such situations, local offices will sometimes access SSA's Third Party Query (TPQY) system. This database, available since 1984, contains both the 7.5 million SDX records (see below) and the 64 million BENDEX records. To request a TPQY, an eligibility worker completes an optical scan card that is then forwarded to SSA in Baltimore. The primary identifiers used are the individual's name and SSN. Generally, the response is received back in about two to three days and provides the same information that is available from the computer matches.

State Data Exchange (SDX) is another database maintained by SSA that contains about 7.5 million records on recipients of Supplemental Security Income (SSI). Once a month, SSA sends to the States a master tape, referred to as the "treasury tape", consisting of records on every SSI recipient in the State regardless of the individual's public assistance status. Updates are also sent by SSA during the month -- as many as one per week -- that give the latest changes in the SSI rolls.

As with BENDEX, the primary identifier for matching purposes is the SSN. Each individual record includes: the individual's name, SSN, date of

birth, gender, and race; living arrangements and county of residence; claim number; date of initial eligibility and reason for eligibility; key information on the household's situation such as countable earned and unearned income and resources; and, payment amounts for the last four months.

These data, like the BENDEX information, are used by the States to update their own SDX databases which can then be made available to eligibility workers for use during certification. In this case, however, only three of the nine sites in this study provided eligibility workers with on-line access to SDX information during the certification process; two additional sites made the information available on either hardcopy or microfiche.

Finally, a newly available Federal database, the **Disqualified Individual Reporting System (DRIPS)**, provides information on individuals who have been disqualified from receiving food stamp benefits anywhere in the country. Starting in approximately November 1987, each State will be sent an initial master file and will then receive monthly updates as individuals are added to, or deleted from, the database. At the time of this study, only one State was actively preparing to use this database as soon as it becomes accessible. In the future, this should be a very useful source of information for States to use in the certification process to prevent individuals from simply going to another State to reapply for benefits.

Up to this point, the discussion has focused on databases that are available Statewide. This last section deals with data sources that local welfare agencies have made available to eligibility workers by accessing county-level data systems.

Of the nine sites in this study, three had established such linkages with other county offices. The different information sources are discussed below:

- **County Child Support Records**. These data are basically the same as that described above for the State-level database but only covers individuals who reside in the county. One site made use of these data.

- **Voter Registration Records**. Accessed by name, these records were used in one site to verify the reported addresses of applicants.

Table of Contents

- **Traffic Court Records.** These data, records of traffic citations issued to individuals, were used in one site to verify addresses. However, because the data only cover individuals who have received traffic tickets, the match was generally not done.

- **Property Records.** These data cover all property owned in the county. For each parcel, the database can provide information on the name and address of the owner. Accessed by either name or address, these data can provide information on assets. Two sites made use of these data.

Although these various State, Federal and county data sources were available for applicant matching, they were not all used to verify information for all applicants. As will be discussed below, concerns about the quality of the available information, difficulty gaining access to the data and/or problems associated with using the information once it is received seems to have led to the use of some databases only for certain applicants. Typically, the decision to use some data sources is left to the discretion of eligibility workers who reserve certain matches for applications where they suspect there may be some misreporting.

How are these databases used?

This section summarizes how the different databases are used in the food stamp certification process. In Chapter Four we will see how these operational differences affect the costs and savings associated with applicant matching.

In all nine sites, the client's initial contact with the welfare office is the receptionist who is usually situated in the client waiting area. After determining that the individual is seeking public assistance benefits, the receptionist's first function is to obtain information from the applicant. The way in which this is handled, however, does vary from office to office:

- Application Form Only. In four of the nine sites, the client is initially provided with an application form to complete. This is generally a lengthy form that collects detailed information about the household's financial situation as well as key characteristics of each household member (e.g., age, gender, date of birth, Social Security number, relationship to head of household, etc.) The applicant returns this form to the

receptionist who checks it for completeness. In two of these four sites, the client leaves after submitting the completed form to the receptionist. They are scheduled to return for an intake interview and are given a list of documents to bring with them (e.g., rent and utility receipts, Social Security cards, birth certificates, etc.). In the other two sites, the applicants wait to be called for their interview that same day.

- Screening Form Only. In three of the nine sites, the applicant is only provided a screening form that collects limited data about the household. Typically, this includes address and the name, gender, race, date of birth and Social Security number of each member of the applicant's household (including children). This information is then used by the receptionist to perform the first computer match -- the check against public assistance records of both active and inactive cases, as well as pending applications that have not yet been determined (this is discussed below). In the meantime, the client waits to be called for an intake interview on a first-come-first-served basis.

- Screening Form and Application. In one site, while the screening form is used by the receptionist for an initial screening against public assistance benefit records, the applicant is given an application form to complete. When finished, the form is returned to the receptionist who schedules an intake interview, typically for the next day.

- Screening Interview. One site in the study requires the applicant to meet with an intake interviewer who determines if the household appears to be eligible for benefits (this is only a preliminary assessment) and, if so, collects basic information about each member of the household. These data are used immediately with the client present to check public assistance records and State records of employer-reported wages and Unemployment Insurance (UI) benefits. A more thorough interview is usually conducted later that same day.

Once the necessary identifying information is obtained from the applicant (either on a screening form or a complete application), the first step in the process of computer matching takes place -- the screening of all members of the household against the public assistance benefit records. This matching step serves four primary purposes:

- It can identify applicants who have tried to submit applications to more than one office in the State. From the time at which the application is entered into the State's automated case management system (commonly referred to as "registering" the application) any subsequent attempt to register the applicant as a pending case anywhere statewide will trigger a notice to the local office staff.

Table of Contents

- It can identify applicants (or anyone in the household) who are currently part of an active case and are seeking to obtain duplicate benefits.

- For applicants who were prior recipients of public assistance (the length of time for which records of inactive cases are maintained varies from site to site) this matching step allows the State to maintain a unique identifier for every individual even if they experience a break in their participation or change from one assistance unit to another (e.g., through marriage). Applicants who were "not previously known" to the system are assigned a unique identifier at the time of their application.

- For applicants who were prior recipients, this step allows the local agency to retrieve information about the client and the assistance unit which can help the eligibility worker to make an accurate determination of eligibilty for the current application. While it is often the case that the client's situation has changed since they were last participants, access to these prior records can provide invaluable leads regarding household composition, assets, absent parents, earnings history, etc.

All sites performed this match as the initial step in the certification process. Performing this match before the interview provides the eligibility worker with very useful information about the client at the time when there is an opportunity to question the client. In five sites this initial step was conducted by special clerical staff whose sole function was computer verification. These clerks print and return match results to the eligibility worker. In two sites this step was performed by the receptionist, who also prints the results for the assigned caseworker, and in the last of the nine sites this verification was done by the intake interviewer. In all cases, the primary identifier used to access these records was the name of each individual in the household, unless, of course, the applicant happened to bring in some documentation which provided their previous client ID number.

While this initial match against public assistance benefit records can provide useful information, it is of no help for first-time applicants who were not prior recipients. In addition, checking against the Agency's own records does not provide an independent verification of applicant-reported

information -- if the applicant previously misreported, this screening step would only uncover incorrect information. Consequently, applicant matching typically includes a screening against various external data sources including other State recordkeeping systems, Federal information systems, and, in some instances, county-based records.

As with records of public assistance benefits, all nine sites matched applicants against wage and UI benefit records. In six of the nine sites, this match was done prior to the client interview; three used specially trained clerical staff to conduct this matching, one used the receptionist, and two assigned this responsibility to the eligibility worker. Again, matching prior to the interview places invaluable information into the hands of the eligibility workers when it can be most useful for determining an applicant's eligibility for benefits, i.e., while they are in the welfare office. The three remaining sites used clerks to perform the wage/UI match after the client interview was completed.

Five of the nine sites could match applicants against records maintained by the State's Department of Motor Vehicles (DMV) to check for the possession of unreported automobiles. In three of these five sites the data were available on-line to local office workers. Two of these three sites used clerical staff to match clients against this database after the client interview, but only one matched all clients, in the other it was dependent upon the request of the eligibility worker. In the other site, there were differences found among offices within the local agency regarding the use of the DMV data. In one office, the receptionist would screen all applicants prior to their interview with the eligibility worker; in the other, the decision to screen applicants was left to the discretion of the eligibility workers who would do so after the client interview if they had a reason to suspect that the applicant had failed to disclose the ownership of an automobile (such as reporting earnings without a car to get to and from work). In the remaining two of the five sites, the DMV data were not available on-line and the decision to check applicants against these data was left to the eligibility workers.

The use of motor vehicle records to verify applicant-matching information, as noted above, is often left to the discretion of eligibility workers. For the most part, this decision seems to be the result of problems

associated with the use of these data. Because of a lack of a unique identifier (DMV records are maintained by name) it is often difficult to locate a particular individual in these databases. For common names, the search process can involve scanning pages of output to locate the desired person. As a consequence, this match is generally reserved for those situations where the eligibility worker has reason to suspect that the applicant has misreported their circumstances.

State vital statistics records were found to be in use in three of the nine sites to verify dependent relationships, to check the identity of absent parents and to verify household size. These data were available on-line at all three sites. The way these data were used differed markedly between the three sites, however. At one site, the match was done for all applicants by a specially trained clerical worker before the client interview was conducted. At the other two sites, the match was performed by the eligibility worker after the interview and only in those cases where they had some reason to check the client's reported information.

Three sites were found to make use of State Child Support Enforcement records; two had on-line access to these data while one had to contact the administering agency separately to obtain the desired information. In all cases, this verification was done after the client interview and at the discretion of the eligibility worker who was also responsible for carrying out the match.

In addition to matching against State data sources, some sites made use of available Federal databases. Information on Social Security benefits and Supplemental Security Income (SSI) are available to States from the Social Security Administration (SSA) on two data files, BENDEX and SDX. However, only five of the nine study sites made use of these data for applicant matching. In three of the five sites, both BENDEX and SDX data are available on-line, in one site BENDEX is available on-line and SDX data is available on hardcopy printouts, and in the last site both BENDEX and SDX are available on microfiche. In two of the sites where either BENDEX or SDX data are available on-line to local agency staff, these data are used to verify information for all applicants. In one of these two sites the screening was done before the interview while in the other it is done afterwards; in both instances, the match was done by specially trained clerks. In the remaining three sites, the

decision to check these data was left to the discretion of the eligibility worker after the completion of the intake interview.

Three of the nine sites had on-line access to County property records to verify the ownership of assets. In each case, the verification was done after the client interview. In two of these three sites this match was done at the discretion of the eligibility worker; in the other site it was done for all applicants. At one site, the eligibility workers were required to do this match themselves; at the other two sites it was done by clerical workers responsible for all applicant matching activities.

One site had on-line access to County traffic court records and voter registration records that were intended to be used to verify residences. This was left to the discretion of the eligibility workers after the client interview was completed. Both matches, however, were rarely performed because workers found these data to be unreliable and because access to these data was through a single terminal. Finally, this same site provided access to Child Support Enforcement records for county residents. These records were also used at the discretion of eligibility workers after the client interview was completed. Because of both limited access to these data (through the same single terminal used for traffic court and voter registration records) and the limited coverage of these data (county residents only), this match was rarely done.

The way in which applicant matching has been integrated into the food stamp certification process is summarized in Exhibit 4 (information on the extent to which each database is used can be found on page 64). First, there are clear differences in the number of data sources that have been made available to local office staff to verify applicant information. DeKalb, Kent, Knox, St. Louis, and Wake Counties with six or more data sources available should, all other things being equal, have a greater opportunity to detect reporting errors than Pima, Wyandotte and Hudson Counties and Sioux Falls with from two to five databases available. But, as will be discussed later, these opportunities are not equal because the various databases are not equally used for all applicants.

Second, there are also differences among the nine sites in terms of when the matching data are made available to the eligibility worker. Benefit records are always screened prior to the intake interview. In four sites,

Table of Contents

EXHIBIT 4: RELATIONSHIP OF APPLICANT MATCHING TO FOOD STAMP CERTIFICATION PROCESS

	Benefit Records		Wage/UI Data		BENDEX/SDX		Motor Vehicles		Property		Other	
	When Done	By Whom	When Done	By Whom	When Done	By Whom	When Done	By Whom	When Done	By Whom	When Done	By Whom
Pima County, Arizona	Day(s) Before Interview	Clerk	Day(s) Before Interview	Clerk	After Interview	E.W.	--	--	--	--	--	--
Kent County, Delaware	Day(s) Before Interview	Recep-tionist	Day(s) Before Interview	Recep-tionist	After Interview	E.W.	After Inter-view	E.W.	--	--	After Inter-view	E.W.
DeKalb County, Georgia	Same Day As Interview	Recep-tionist	Same Day As Interview	E.W.	--	--	After Inter-view	E.W.	After Inter-view	E.W.	After Inter-view	E.W.
Wyandotte County, Kansas	Day(s) Before Interview	Clerk	After Interview	Clerk	--	--	After Inter-view	Clerk	After Inter-view	Clerk	--	--
St. Louis, Missouri	Same Day As Interview	Recep-tionist	After Interview	Clerk	After Interview view	Clerk	--	--	--	--	After Inter-view	E.W.
Hudson County, New Jersey	Same Day As Interview	E.W.	Same Day As Interview	E.W.	--	--	After Inter-view	E.W.	--	--	--	--
Wake County, North Carolina	Same Day As Interview	Clerk	After Interview	Clerk	After Interview	Clerk	After Inter-view	Clerk	After Inter-view	Clerk	--	--
Sioux Falls, South Dakota	Same Day As Interview	Clerk	Same Day As Interview	Clerk	--	--	--	--	--	--	--	--
Knox County, Tennessee	Day(s) Before Interview	Clerk	Day(s) Before Interview	Clerk	Day(s) Before Interview	Clerk	--	--	--	--	Day(s) Before Interview	Clerk

this match is completed from one to ten days prior to the interview depending upon how the office handled scheduling. In the remaining five sites, this match was done just before the intake interview. Wage and UI data, show a somewhat different pattern with the sites being equally split -- three completed the match a day or more before the interview, three on the same day, and three afterwards. The most consistent pattern, however, is related to all of the other verification sources that are used. With the exception of one site, Tennessee, the remaining computer matches were done after the client interview.

The consequences of these differences in timing for match effectiveness will be examined in Chapter Four. Having as much information as possible about the applicant before the interview can be advantageous to the eligibility worker. Applicants realize that the worker has information about them which they may or may not have provided. Moreover, they do not know how much information the worker has in his/her possession or the extent of its accuracy. Getting information to eligibility workers early in the certification process, not only reduces the likelihood of misreporting by clients but improves the efficiency of the application process -- there are fewer changes that have to be made later which both increases the administrative cost of processing applications and causes delays in getting correct benefits to clients. This is not to say, however, that applicant matching cannot be effective if done after the client interview. In fact, some local office staff perceived greater gains from completing most matches after the intake interview thereby allowing them to review the results with the applicant's story already in hand.

Having the information before the client interview also allows the eligibility worker to resolve any discrepancies expeditiously. When the computer matches are done after the client interview, the eligibility worker must recontact the applicant (or in some cases, third parties such as employers) to obtain documentation that either supports or refutes the client-reported information. This is both time consuming and costly.

Finally, eligibility workers told us that the information provided by the computer matches often has value beyond the simple piece of data provided by a particular match. Very often, the data can lead the eligibility worker to pursue a particular line of questioning with the applicant that they

may not have done in the absence of the information. For example, discovering unreported wages can lead a worker to question automobile ownership as a means of getting to work. For the most part, the interview process involves reviewing the individual's application and any supporting documents they have brought with them (Again, this is affected by the timing of the interview -- if done on a different day than when the application is submitted allows the office to provide the applicant with a list of documents they must bring with them to the interview.) Workers try to probe the applicant to make sure that the information provided is both complete and accurate. The more advance information they have, the better equipped they are to elicit correct and comprehensive information from the applicant.

Generally, applicants are required to supply copies of various documents regardless of whether any discrepancies are found through computer matching. These include copies of: Social Security cards for all household members; birth certificates or adoption records; pay-stubs or separation papers; rent and utility receipts; naturalization papers; certification or award documents for any form of unearned income received; records of any assets such as vehicle registrations, bank statements, life insurance policies, property tax bills, etc. Lists of these standard verification documents are usually given to the applicant either before their interview, if it is scheduled for a day other than when they submit their application, or after their interview is completed. It is the applicant's responsibility to obtain and submit the necessary documents.

The treatment of discrepancies uncovered through computer matching is largely dependent upon when the verification is done in relation to the client interview. For those matches done before the interview, the needed documentation is simply requested of the applicant -- they must provide the supporting information along with any other required documents. When the match is done after the intake interview, the local office has two choices: make a collateral contact with a third party source (such as an employer) to obtain the needed verification; or, contact the applicant directly (by phone or letter) and ask them to resolve the discrepancy.

For the most part, the sites included in this study did not verify applicant information themselves -- the burden of proof was typically placed upon the individual. The view was that it is the applicant's responsibility

Table of Contents

to provide the required evidence of their household situation and need for public assistance. This is also the least costly way for local agencies to certify applicants for benefits. In only two of the nine sites did local office staff make use of any collateral contacts, and these were generally limited to only particular parties, most often employers, and only in certain instances.

The remaining activities in the certification process include: key-entering applicant-reported information into the automated case management system; obtaining all the necessary verifications of the applicant's data; reviewing the information before computing eligibility to make sure it is all accurate; calculating eligibility and benefit amounts; and, notifying applicants and issuing benefits.

What is the ability of applicant matching to detect applicant-reported errors?

Exhibit 5 presents data on the results of applicant matching for each of the nine study sites including: the total number of applications examined at each site; the number (and percent) of applications with discrepancies detected by applicant matching; the number (and percent) of the total number of applications for which the discrepancy led to a change in benefits; and, the number for which the discrepancy led to a denial of eligibility (the denials are included in the number of cases with benefit changes). Overall, 5.7 percent of matched applications were found to have a discrepancy between applicant-reported information and data available from an external source. However, only for 3.3 percent of the matched cases did this discrepancy lead to a change in benefits and for about one percent, a complete denial of eligibility.

Although the incidence of discrepancies and benefit changes is relatively low, avoiding this level of overpayment error up-front should contribute to reducing States' overall payment error rates. We queried State and local staff regarding their views on the effect of applicant matching on reducing payment errors and generally heard two types of responses. First, most staff do not believe that there are that many errors to detect. This view reflects the general belief that applicants are basically honest about their situation, at least as far as they themselves understand the program eligibility requirements. It is believed that misreporting occurs mostly

Table of Contents

EXHIBIT 5: THE INCIDENCE OF DISCREPANCIES AND BENEFIT CHANGES DUE TO APPLICANT MATCHING BY SITE

Site	Total Number of Applications Examined	Number with Discrepancies #	Number with Discrepancies %	Number of Benefit Impacting Hits[a] #	Number of Benefit Impacting Hits[a] %	Number of Denials #	Number of Denials %
Pima County, Arizona	266	17	(6.4)	14	(5.3)	3	(1.1)
Kent County, Delaware	264	6	(2.3)	6	(2.3)	1	(0.4)
DeKalb County, Georgia	204	6	(2.9)	3	(1.5)	0	(0.0)
Wyandotte County, Kansas	208	14	(6.7)	6	(2.9)	1	(0.5)
St. Louis, Missouri	308	28	(9.1)	16	(5.2)	4	(1.3)
Hudson County, New Jersey	359	8	(2.2)	8	(2.2)	4	(1.1)
Wake County, North Carolina	348	59	(17.0)	27	(7.8)	8	(2.3)
Sioux Falls, South Dakota	220	4	(1.8)	1	(0.5)	0	(0.0)
Knox County, Tennessee	306	0	(0.0)	0	(0.0)	0	(0.0)
Totals	2,483	140	(5.7)	81	(3.3)	21	(0.9)

[a]Includes denials

Table of Contents

after the applicants are already on the rolls and their situation changes. At this point, clients frequently do not want to report the change, or they do not understand that they must report. This view is consistent with the relatively few number of errors detected through applicant matching. Given more of these errors, applicant matching would have a quantitatively larger effect, but given the actual situation, the effect may be modest.

The second general theme is that other concurrent programmatic and processing changes have also contributed to a reduction in payment errors. As a consequence, it is difficult for most staff to distinguish among the different effects. These other changes include: the use of automated certification systems that greatly reduce eligibility worker errors (e.g., arithmetic mistakes) shorter certification periods; better client interviewing techniques; and, the increased use of recipient matching. With regard to recipient matching, it was often difficult for staff to separate out the effects of matching for recipients -- both batch matches on the ongoing caseload and matching at recertification -- from the effects of matching for applicants. In fact, to the extent they say they can do this, they tend to ascribe somewhat more effectiveness in terms of the number of discrepancies detected to the recipient matching. This is because, according to our respondents, most discrepancies arise from interim changes in clients' situations. Their situations are fairly well-established at the time of a given case action like certification, but after that it changes, and the client either does not wish, or is unaware of the need to report the change.

Entering applicant data on the system establishes the database that will be used later to calculate eligibility and benefits, provides a way to track eligibility worker actions (to ensure that the standard of promptness is met), and to "pend" the application in order to prevent the applicant from submitting another application for benefits. In most instances, this is done by clerical staff. However, in one site visited the eligibility workers had individual computer terminals on their desks and were responsible for entering and updating all client information directly into the State's automated system. This not only reduced the amount of paperwork required but greatly reduced the movement of client records among different staff. Eligibility workers also found that this gavé them a sense of "being more in control" of their cases.

All of the sites included in this study employed sophisticated automated systems to compute benefits once all of the client data were assembled and verified. Typically, these systems also generated client notices informing them of the result of their application and, in most cases, automatically triggered the issuance of benefits to the client.

Returning to Exhibit 5, it can be seen that the detection of discrepancies is by no means the same at the various sites, ranging from a low of zero in Knox County to a high of 17 percent in Wake County. In fact, three sites -- Pima County, St. Louis and Wake County account for about 70 percent of the total number of detected discrepancies and benefit changes. We will have more to say on this in Chapter Four when we discuss operational differences among the sites and their effect on the costs and savings associated with applicant matching.

Most of these discrepancies and benefit changes are detected through matches against a few data sources (see Exhibit 6). The wage and UI benefit matches combined account for about 46 percent of the detected discrepancies and, more importantly, 54 percent of the cases with benefit changes and 57 percent of those cases that are denied. The other match producing a large proportion of discrepancies is motor vehicle assets accounting for 23 percent of the total. But, there are important differences both in the extent to which the different databases are used and, as a result, can contribute to the success of applicant matching. First, the screening against public assistance records is essentially a universal part of applicant matching. While not used quite as often, data on wages, UI benefits and SSA benefits (BENDEX and SDX) are generally used for most applicants where they are available. The least frequently used data sources are property and motor vehicle records.

With regard to motor vehicle records, eligibility workers often avoid using these data because these records lack a unique identifier for matching purposes, as noted earlier, the individual's name is used. As a result, the data returned represent all automobiles registered to individuals in the State with the same name. For common names, this can produce quite a long list which then must be reviewed to locate the desired person. In addition, at least in some situations, the data returned provide information on any automobile ever owned by the individual, not just those currently owned, making the information even more difficult to use. The county property

Table of Contents

EXHIBIT 6: DISCREPANCIES AND BENEFIT CHANGES DUE TO APPLICANT MATCHING BY DATABASE

Database	Total Applications with Database Available	Number of Match Attempts (1) #	Number of Match Attempts (1) %	Number of Match Hits (2) #	Number of Match Hits (2) %	Number of Discrepancies (2) #	Number of Discrepancies (2) %	Number of Benefit Impacting Hits (2) #	Number of Benefit Impacting Hits (2) %	Number of Denials Due to Matching (2) #	Number of Denials Due to Matching (2) %
Public Assistance Records	2,483	2360	(95.0)	1315	(55.7)	17	(0.8)	16	(0.2)	5	(0.1)
Wages	2483	2212	(89.1)	1235	(55.8)	47	(2.1)	32	(1.4)	9	(0.4)
UI Benefits	2483	2116	(85.2)	465	(22.0)	18	(0.9)	12	(0.6)	3	(0.1)
BENDEX	1596	1223	(76.6)	127	(10.4)	11	(0.9)	8	(0.7)	0	(0.0)
SDX	1492	1219	(81.7)	195	(16.0)	9	(0.7)	7	(0.6)	1	(0.1)
Property Records	760	520	(68.4)	51	(9.8)	6	(1.2)	1	(0.2)	1	(0.2)
Motor Vehicles	1383	596	(43.1)	231	(38.8)	32	(5.4)	5	(0.8)	2	(0.3)
Totals (3)						140	(5.7)	81	(3.2)	21	(0.9)

Notes

(1) Number of applications subjected to a computer match on the particular database. Percentage based on number of applications in sites with database available.

(2) Percentage based on total number of attempts.

(3) Percentages based on total of 2,483 applications.

records were also not considered to be particularly useful by caseworkers for applicant matching. In their view, the quality of the data is often poor, the information is typically well out-of-date, and the number of hits that are found is generally small, making it not worth the effort.

In terms of the public assistance benefit records, one factor that may have some bearing on the usefulness of these data for applicant matching is the length of time for which prior records are maintained on the central data system. This ranged from one to four years for the sites in this study. Although older records are less likely to have a close relationship to the household's current composition and financial situation, these data can provide leads for the eligibility worker to use during the interview with the applicant (e.g., helping to identify absent parents). The tradeoff, of course, is between the cost of maintaining these records on an automated system and the savings achieved by using the information for individuals who reapply after some break in participation. addition, consideration should be given both to the extent to which current applicants tend to be prior participants and the rate of caseload turnover, i.e., the more stable the caseload the less likely it is for an applicant to be a prior participant. While this study does not provide information which can be used to determine the optimal length of time records should be kept, the evidence does indicate that this should be a consideration for States when designing their automated systems.

The usefulness of wage data for applicant matching seems to be primarily related to the extent to which this information reflects the applicants current circumstances. Misreported wage income was typically the leading source of payment errors in each of the nine sites visited in this study. Controlling these errors was generally viewed as the best way to reduce overpayments in public assistance programs. The ability of State employer-reported wage data to resolve these problems, however, was considered to be limited for the following reasons:

- The data are anywhere from three to six months out-of-date. The data are reported quarterly; although the information is due at the end of the month following the end of the quarter, some data do come in after this point. It also takes the State agency about a month to key-enter the information and to

update their database. As a consequence, these data are frequently three months old, and can be as much as five or more months out of date (if the wages were earned at the beginning of a quarter and are not entered into the system until the end of the succeeding quarter). For example, data for the quarter ending in April are often not completely available until about the end of the next quarter (i.e., June). This lag problem can be further complicated by the way in which the State enters the employer-reported information. If data are keyed in batches over time, a match done at a particular point in time may yield different information about an individual at a later date, depending upon when in the quarter the month is done.

- The wage data are quarterly aggregates which do not correspond to the monthly accounting periods used to determine benefits in the Food Stamp and AFDC Programs. This is a particular problem for individuals who were actively employed for only a part of the specified time period.

- Most States wage reports exclude certain categories of workers including federal employees, the military, railroad workers, some domestics, some farm workers, the self employed, individuals who work in neighboring States, and those employed within the "underground economy". In some instances, these excluded individual's constitute a significant portion of the welfare population. In particular, State officials would like to gain access to wage records of federal and military workers especially where the number of such individuals in the State is relatively large.

- Finally, reporting errors can reduce the usefulness of these data. These errors can arise on the part of the employer (e.g., entering the wrong SSN for an individual) or individuals working under erroneous SSNs; a common way to circumvent wage matching is to report a child's SSN to an employer.

Despite the problems associated with these data, they are the best information available on employment earnings. The only other commonly data source for wage information is the Social Security Administration's Beneficiary Earnings Exchange System (BEERS). But these data have more serious time limitations. The information is updated annually, and the updating does not occur until October of the subsequent year making these data at least one or two years old.

The two suggestions that State and local staff had for improving the quality of the wage data were: to provide local offices direct access to the most up-to-date information rather than waiting to receive an end of quarter summary; and, requiring employers to report monthly rather than quarterly. Given the burden the last option would impose on employers, it is unlikely that it will ever become reality and most respondents seemed to realize this.

The UI data, in contrast to the wage data, were generally considered by State and local staff to be accurate and timely largely because of the frequency with which the data are updated. But, as noted by one respondent, UI errors were such a minor problem that "it was like hitting a fly with a hammer." An additional use of the UI data, at least in one site, is to provide information to applicants regarding their potential eligibility for benefits. This can sometimes lead to reductions in food stamp benefits by getting individuals to apply for UI benefits who would not have otherwise done so.

Finally, it is informative to examine the characteristics of those households experiencing benefit changes due to applicant matching (see Exhibit 7). Although the differences are small, it does appear that larger households, those with employed persons, and elderly households have a slightly greater chance of being affected by applicant matching. Household size probably reflects an increased opportunity for error -- the more people in the household the greater the chance for an error to be detected in reported circumstances. The presence of earnings is also not surprising given the previously mentioned effectiveness of wage matching and the presence of an elderly household member is most likely related to errors in Social Security and SSI benefits -- both of which account for a sizeable share of the benefit changes noted in Exhibit 7.

It also appears that there are important differences related to whether the applicant is NPA or PA and if expedited services have been provided. While NPA applicants represent 36 percent of the match attempts made by the nine sites, they account for a disproportionate 60 percent of the applications with benefit changes due to matching. This is probably a result of the increased likelihood of wage earners among this group. Similarly, expedited applications do <u>not</u> appear to be disproportionately represented. These cases account for four out of the 81 applications with benefit changes

Table of Contents

EXHIBIT 7: CHARACTERISTICS OF CASES WITH BENEFIT CHANGES DUE TO APPLICANT MATCHING

	Cases With Benefit Changes	Cases Without Benefit Changes
Household Size		
1	16.2%	23.9%
2	28.4	26.7
3	25.7	21.5
4	12.2	15.8
5	5.4	7.3
6+	12.2	4.4
Total	100.0	100.0
Number of Employed Persons		
0	60.8	70.4
1	35.1	26.7
2	4.1	2.6
3	0.0	0.2
Total	100.0	100.0
Gender of Head of Household		
Male	24.3	22.6
Female	75.7	77.4
Total	100.0	100.0
Persons Over 59 Years in Houseold?		
Yes	17.6	9.1
No	82.4	90.9
Total	100.0	100.0
AFDC Income?		
Yes	27.0	22.7
No	73.0	77.3
Total	100.0	100.0

(about 5 percent of the total) but represent about 9.5 percent of the total applications examined. Three of these four had errors identified through the match against the wage/UI files and one against SSA benefit records.

COMPUTER SYSTEMS

The computer systems that support applicant matching can be divided into three primary parts: the central processing facility on which the databases used for matching reside; the local office equipment used to access these data including the necessary communications equipment and software protocols; and, the operating system and programming languages used to create and support the various computer applications. Despite the fact that these different system components are all needed to conduct applicant matching, such support systems are generally not put in place solely for this purpose. For the most part, applicant matching represents an incremental addition to much broader technological and organizational developments that are dramatically changing the nature of public assistance programs.

As a consequence, the reader should keep in mind that the site-to-site differences in hardware configurations discussed in this section have little, if anything, to do with applicant matching per se. The nature of the computer support system in place in a particular State is not determined by the decision to do applicant matching nor, for the most part, do we expect differences in these systems to have a significant effect on the process or effectiveness of computer verification.

Central Processing

The operation of the central computer systems used in the nine sites differed along two dimensions: whether local office staff communicate directly with a central "host" computer or through a system of nodes distributed around the State; and, whether local office staff can access different databases through a single communications link by working through menu driven screens or if they must "log off" one system and "log on" to another or if they must use an entirely separate computer terminal.

With regard to the first issue, the difference is really of little consequence to the users of the applicant matching capability. The way in

which data are processed is "transparent" to the user, the path their inquiry takes has little impact on their ability to obtain timely information about applicants for public assistance benefits. In one situation, local office terminals linked to communications controllers can send and receive information directly to and from a central computer that maintains the desired database. Inquiries and data are passed back and forth directly.

In the second situation, communications pass through a regional node computer (often a minicomputer). These nodes are used to process case actions (e.g., input applicant data or modify data for an active case) initiated by local agencies during the day; overnight, all new transactions are passed to the host computer to update the master database which is then used to update the data files maintained at each node before the start of the next day. For matching purposes, this added step has little effect except regarding the speed with which inquiries are answered -- the longer the delay, the more frustrating it is for local office staff and the more time it takes to screen applicants against the databases. One system does not necessarily have an advantage over the other. Either approach can be designed to operate effectively.

Of the nine sites in this study, five use direct links to a central mainframe computer and four operate through a system of decentralized nodes. The distinction is not purely a function of the size of the caseload as both large and small operations were found in both categories.

The second issue of concern here, the extent to which access to the various databases is more or less difficult for local office staff, can have important consequences both for the cost of doing applicant matching and the propensity to employ a particular database. There are two parts to this issue: the ability of local office staff to obtain information on applicants when they need it; and, the degree to which access to the different match databases is integrated into a single on-line computer program.

Although State and local staff see clear advantages to having a computer terminal on the desk of each eligibility worker, resource constraints have generally led to a situation in which one terminal may be provided for every 3-4 eligibility workers. This level of availability is adequate to avoid having staff waiting to use a terminal but it does not allow local offices to obtain some important ancillary benefits -- the use of the

computers to support the workers in their day-to-day activities such as the use of automated budgeting programs, the ability to move to a "paperless" system with eligibility workers responsible for directly key-entering and updating client information, and the deterrence effect of the terminal during the client interview.

Even when terminals are accessible to local workers, their use for applicant matching can be made more or less difficult depending upon the extent to which access to the different data sources is integrated into a single system. At one end of the spectrum, workers in some sites were required to use a single dedicated terminal to access certain databases. This was often the case with county-based records or vital statistics records. At the other end of the spectrum, all of the databases used could be accessed by a few simple keystrokes to move through a series of menu screens. As discussed earlier, the more difficult it was for workers to access a particular data source the less likely they were to use it. Screening was done in these cases only when there was reason to suspect the veracity of the applicant.

The degree to which the various matching data sources are integrated into a single system appears to be related to the maturity of the system -- the newer the system, the more likely it is to have made use of modern technological developments that make such integration relatively inexpensive. This is not to say that older systems can't be redesigned to provide the same features, but it is generally more expensive to modify an existing system.

Communications

Applicant matching is highly dependent upon communications between local welfare offices, where the client information is found and central computer facilities, where the verification data reside. In fact, one of the most commonly noted problems for local agencies is the reliability of the communications link between them and the centrally maintained datafiles.

In most instances, local offices use "dumb" IBM 3270-type computer terminals for the majority of their local computer processing applications. As technology is evolving, however, there is an increasing use of personal computers (PCs) to emulate the 3270-type terminals (by the addition of a

special board to the PC). The cost difference between the two options is comparatively small, particularly in light of the greatly expanded functions provided by the PC. Where PCs were being used, efforts were underway to provide eligibility workers with additional tools to assist them in their day-to-day activities. Examples include word processing, menu-driven decision programs to help with complex eligibility cases and/or to construct household budgets, and "tickler" systems to help workers keep track of appointments and other case actions. Most workers found this added capability to be very useful and generally increased their morale.

The typical networking arrangement begins with a communications controller (e.g., an IBM 3725 Communications Controller) connected to the mainframe computer. This forms the link, by way of a high speed modem and leased telephone lines, to remote synchronous communications controllers in the local offices. These controllers, in turn, are connected to the individual 3270 terminals or to the System Network Architecture (SNA) boards in PCs and to impact printers, via coaxial cables.

Teleprocessing for all applications is typically monitored by the Communications Information Control System (CICS) that supports the interface between applications software and the teleprocessing monitor Virtual Telecommunications Access Method (VTAM). VTAM provides for the concurrent execution of multiple telecommunications applications and the transmission of data between the central processor and remote terminals.

The weakness of these networks is their dependence on single leased telephone lines per local office. If the line fails, communication is lost and processing stops until the connection is re-established. Such problems were frequently reported particularly where, as reported to us in Georgia, severe thunderstorms often disrupt telephone service. One State visited in this study was, in fact, seriously considering the installation of a microwave network, or sophisticated satellite communication links, to eliminate their dependence on telephone lines.

Another aspect of the communications network that was noted in one site was the multiplicity of telephone systems around the State. In this one instance, the creation of the network linking the local offices to the central State computer involved working through 25 separate telephone companies. Although this is probably an extreme case, it is not uncommon to find multiple

service providers operating in a State. This can greatly add to the complexity of the network, increase the probability of communications problems, and increase communication costs.

Software and Operating Systems

Almost universally, the operating system used on the mainframe computers in this study was IBM's Multiple Virtual Storage (MVS) designed to control programming operations in large, interactive systems. This is not surprising, because most of the computers were manufactured by IBM.

Most software applications, particularly the older systems, relied primarily on the use of COBOL. Those applications that were developed more recently, however, were found to make use of a "fourth generation" database manager such as ADABAS or language such as Natural.

Although the type of operating system and programming language used have great importance for the efficiency of the automated case management systems they have little effect on applicant matching that is discernible by program staff.

Data Security

Along with the increased use of computer matching, has come concern for the way in which individual data are being safeguarded -- not just from loss or destruction but from unauthorized access, duplication and alteration. One of our most cherished rights is the right to privacy. When an application is made for public assistance benefits, people are required to reveal extensive information about themselves and other members of their household. Applicants give up control over this information as it becomes part of an automated database that can be kept for a long period time.

Federal regulations establish security controls to which all of the systems examined in this study adhere.[27] These include:

- Administrative controls such as the creation of a designated security officer, hiring procedures for personnel having access to secure information, established monitoring and contingency planning procedures, and staff training.

---

[27]The Privacy Act of 1976 (PL 93-579, 5 U.S.C. 55, 2(a) and federal regulations governing the Food Stamp Program (see CFR parts 272 and 273).

Table of Contents

- Physical controls such as restricting access to computer hardware and software, disaster plans, and preventing unauthorized individuals from gaining access to on-line terminals and hardcopy documents.

- Technical controls such as validation of input data, establishment of audit trails for all transactions, back-up procedures for data files, telecommunications security and the use of hierarchical password systems.

For the most part, State and local staff believe that these systems do an adequate job. Total security is probably infeasible particularly within the context of a typical welfare office. As noted earlier, the more accessible the computer terminals and the information on applicants, the more likely workers are to make use of these data. This produces a fundamental tradeoff between access to individual data records to improve the integrity of public programs and the security of these data to protect the rights of individuals.

The basic objectives of system security features are to: make it difficult for unauthorized individuals to gain access to private information; associate access to data with job function, i.e., restrict the ability to alter records to only designated workers; and, most importantly, install automated systems that maintain adequate audit trails of all transactions and attempts to access or change particular records.

FUTURE DEVELOPMENT PLANS

The general use of automated systems for public assistance programs is continuing its rapid expansion. With respect to applicant matching in particular, the sites included in this study are considering a wide range of improvements to their current procedures:

- Adding New Databases. Success with applicant matching has led to increased interest in expanding the sources of information available to eligibility workers. These include:

  -- county school records to verify the presence of children in the household;

  -- one site was considering the use of Credit Bureau reports (to obtain data on applicants that can be used to uncover unreported wages) on the basis of a successful pilot test plus reported results from Pennsylvania which is said to have achieved a benefit-cost ratio of 37 to 1;

Table of Contents

-- under the auspices of the Federal Immigration and Naturalization Service, the implementation of a Systematic Alien Verification for Entitlement (SAVE) system; and,

-- where it is not currently available, on-line access to State motor vehicle records, vital statistics records and county property tax records.

- Interstate Networks. A number of respondents expressed interest in establishing arrangements with neighboring States to share information. The most exciting project we encountered, however, is a demonstration effort currently under development by the Federal Division of Child Support Enforcement. Intended to locate absent parents, this project will involve a multistate network involving Iowa, Kansas, Missouri, Nebraska and Oklahoma; consideration is also being given to adding Arkansas, Illinois and Tennessee to the network. When fully implemented, the system will provide on-line access to data on individuals in any of these States including: records of employer-reported wages and UI benefits; records of motor vehicle registration and driver licenses; income tax records; child support payments; and, AFDC and food stamp benefit history records. The on-line inquiries would involve entering identifiers (SSN, perhaps name and birth date), the State to which the inquiry was directed and the data type requested. The inquiry would then be sent out through the data links established to serve this network and the requested information returned from the target State and displayed on the user's screen. Missouri is to serve as the control data hub for the entire network. Although the system is still entirely in the planning stage, the technical capabilities to support such a network are already in place, and the outlook for the development of this multistate-matching system appears positive, if not probable.

- General Systems Improvements. Most of the sites visited in this study were planning some sort of improvement to their existing automated systems or verification procedures that would greatly facilitate applicant matching including:

  -- In some sites, inquires related to wage and UI benefit data are not made directly into the primary State database. Rather, a file is constructed from quarterly tapes. Here, plans are underway to establish a direct on-line interface in order to provide local offices with the most current information on individuals.

  -- Where separate systems must be accessed to screen applicants against different databases, the trend is toward integrating access into the automated case management system. By selecting different options on a menu, workers would be able to directly access the different data sources without the time consuming process of logging off and on, or even worse, moving to dedicated terminals.

Table of Contents

-- Expanding the availability of terminals. A goal that almost all of the respondents said they would like to achieve is a terminal on the desk of every eligibility worker.

-- Finally, interest seems to be growing in many places to move to a more "paperless" system. By allowing eligibility workers to key-enter client data and do their own computer verification, local operations would be streamlined and the use of cumbersome data entry and "turnaround" documents would be eliminated.

SUMMARY

Applicant matching has developed for the most part, as a natural outgrowth of the increased use of computer matching for active recipients of public assistance and a expanding use of data processing in State and local governments. Once the technology was available and the procedures and organizational arrangments were in-place to verify recipient data, it has been relatively easy for States to make use of this technique to identify misreporting errors made by individuals before they become recipients.

Operationally, the sites in this study were able to integrate applicant matching into their existing certification process in different ways, yet could still do it in a way that produced savings. This flexibility

Table of Contents

CHAPTER FOUR

THE COSTS AND SAVINGS ASSOCIATED WITH APPLICANT MATCHING

As discussed in Chapter Two, we collected information on all households applying for food stamp benefits during a period of from four to six weeks at each of the nine sites in this study. For each applicant we collected the data originally provided regarding their household circumstances and the information eventually used to determine their eligibility for benefits. We also collected, for each application, information on actions taken by the local welfare office related to applicant matching, i.e., the matches that were done and the results of each one, follow-up activities related to any discrepancies, and which staff performed each action and how long it took to complete. These data allowed us to measure the costs and savings attributable to applicant matching at each of our nine study sites.

The purpose of this chapter is to present the findings of our analysis of these data. The discussion is divided into five parts: savings due to applicant matching; the cost of applicant matching; the relationship of savings to costs (i.e., savings to cost ratios); the effect of procedural differences on savings and costs; and, a brief discussion of certain unmeasured costs and benefits of applicant matching.

SAVINGS FROM APPLICANT MATCHING

As shown in Exhibit 8, all of the sites except Knox County (which found no discrepancies out of a total of 306 applications) realized some savings from applicant matching. On average, $11.60 was saved for each applicant. Of this amount, about $6.40 (or 55.2 percent) comes from reduced food stamp benefits, about $1.58 (or 13.6 percent) comes from reduced AFDC benefits, about $1.72 (or 14.8 percent) from reduced Medicaid benefits, and about $1.90 (or 16.4 percent) from avoided administrative costs.

The extent of these average savings, however, does vary substantially from site to site: Pima County, $26.00; Wake County, $19.83; St. Louis, $18.07; Kent County, $13.41; Wyandotte County, $10.26; Hudson County, $7.79; DeKalb County, $2.95; Sioux Falls, $1.72; and, of course, Knox County, zero.

Table of Contents

EXHIBIT 8: COSTS AND SAVINGS ATTRIBUTABLE TO APPLICANT MATCHING BY SITE

Site	Number of Applications	Number with Benefit Changes	Savings From Applicant Matching: Transfer Payment Savings	Savings From Applicant Matching: Administrative Cost Savings	Savings From Applicant Matching: Total Savings	Costs of Applicant Matching: Labor Costs	Costs of Applicant Matching: Computer Costs	Costs of Applicant Matching: Total Costs	Ratio of Savings to Costs
Pima County, Arizona	266	14	$6,108.57	$807.29	$6,915.86	$1,240.38	$414.96	$1,655.34	4.18
Kent County, Delaware	264	6	3,423.94	116.83	3,540.77	188.43	258.44	446.87	7.92
DeKalb County, Georgia	204	3	603.04	0.0	603.04	709.32	122.72	832.04	0.72
Wyandotte County, Kansas	208	6	1,926.82	207.53	2,134.35	698.50	241.02	939.52	2.27
St. Louis, Missouri	308	16	4,239.42	1,324.73	5,564.15	524.21	453.44	977.65	5.69
Hudson County, New Jersey	359	8	2,140.85	656.93	2,797.78	738.13	232.96	971.09	2.88
Wake County, North Carolina	348	27	5,287.23	1,614.49	6,901.72	376.21	619.58	995.79	6.93
Sioux Falls, South Dakota	220	1	378.90	0.0	378.90	194.22	142.74	336.96	1.12
Knox County, Tennessee	306	0	0.0	0.0	0.0	52.90	393.12	446.02	N/A
Totals	2,483	81	$24,108.77	$4,727.81	$28,836.57	$4,722.30	$2,878.98	$7,601.28	--
Average									3.79

This variation depends on a number of factors:

- The figures shown for an individual site are estimates and, therefore, subject to some uncertainty. We took a snapshot of applicant matching at each site and based our results on the number of applications found in error during that short period of time. If we were to go back at a different time we would, in all likelihood, find different numbers of errors at each of our nine sites. Consequently, the overall results based on combining the findings from all of the sites should be viewed as the best estimate of the cost effectiveness of applicant matching.

- The estimates exclude possible deterrence effects. To the extent that such effects are large, excluding them will underestimate the savings from applicant matching. This can be of particular importance for those sites where the likelihood of deterring misreporting is greatest. For example, the three sites shown in Chapter Two as having large numbers of voluntary withdrawals -- Pima County, (Arizona), DeKalb County, (Georgia) and Wyandotte County (Kansas) -- may be deterring at least some applicants from applying for benefits because of the possibility of having their information computer verified. If these potentially misreporting individuals had submitted an application, the number of detected errors and the associated savings may have been higher.

  Another example of such an effect can be found in Knox County, Tennessee which had no applications affected by computer verification. Prior to submitting an application, individuals are asked to fill out a screening form. A quick match is run against the State recipient data base and the results are given to an eligibility worker who specializes in screening applicants. During the screening interview, the applicant and the worker complete the application together. As a result, it is certainly possible that some applicants chose not to submit a formal application because of information that was revealed by the match. In this situation, the effect of applicant matching occurred before the application was submitted and, because of the methodology we used, no savings could be estimated.

- The magnitude of the savings depends, to a large extent, on the types of households found in error and the nature of the errors detected. Some errors, such as household composition, have a larger effect on benefits than an additional dollar of unearned income. Similarly, PA cases, if found in error, can have savings from more than one source of public assistance. To illustrate this point, take two sites at either end of the spectrum -- DeKalb County, Georgia and Wake County, North Carolina. DeKalb County had only three cases which led to benefit changes from applicant matching and none of these were denials. In addition, the three cases were found to have discrepancies in two areas -- under-reported AFDC and UI benefits, both of which would have been picked up relatively

Table of Contents

soon through regular computer matches of ongoing cases.[28] Wake County, on the other hand, had 27 cases that were found to have benefit changes due to applicant matching and eight of these were denials. The types of errors detected covered a wide range -- wages, AFDC, UI, Social Security and SSI benefits, and property and motor vehicle assets.

One additional factor which may contribute to this variation is the degree to which the sites use a variety of external data sources to verify applicant information. This point will be discussed later in this chapter.

COSTS OF APPLICANT MATCHING

Exhibit 8 also provides information on the resources used to conduct computer matching for the applications examined at each study site. Two types of costs are provided -- labor costs for initially matching applicants against the various databases, reviewing the results, and following up any detected discrepancies (labor costs include fringe benefits and overhead costs), and the cost of the computer transactions.

The most striking result is the relatively low cost of applicant matching. Once the mechanism is put in place to do computer verifications, it is very inexpensive to screen applicants against the available data sources. Computing costs are low and the labor time required is relatively insignificant. On average, the cost per applicant is $3.06 with $1.90 of this total a result of labor costs (about 62 percent) and $1.16 associated with the computer costs (about 38 percent).

The labor required to perform applicant matching, as noted above, consists of two types -- the time required to initially match applicants against the various databases and the time required to review the results and follow-up on any discrepancies. With regard to the first component, initial screening, the time required for a typical application averaged about 3.4 minutes across the nine sites (i.e., 8371 minutes divided by 2483 applications). The average time required to review the results and follow-up

---

[28]Recall from Chapter Two that our calculated savings was determined by the initial difference in benefits with an without match data and the period of time that would have elapsed before the error was detected through some other case action.

on discrepancies averaged about 2.8 minutes per application submitted (i.e., 7044/2483). Combined, the staff time required to complete all applicant matching is, on average, about 6.2 minutes for each application received.

The above averages have been computed across all of the applications received for processing in order to provide a common basis for comparison. Generally, the time required to review the match results and resolve any discrepancies for a single application is greater than that for the initial screening. But, the time required for follow-up is still small because of two factors. First, as discussed in Chapter Three, local offices do not independently verify detected discrepancies, the burden is shifted almost completely to the applicant. That is, applicants are informed of any differences between their information and the match data and it is their responsibility to document their actual circumstances. Second, there are simply not that many discrepancies that require further action on the part of local office staff. For most applicants, the results of computer matching either do not produce a match or provide information that conforms with the applicant's information. As a result, even though follow-up requires more resources than the initial matching of cases, as was shown in Exhibit 6 (see Chapter Three) it just does not happen often enough to generate much in the way of local agency costs.

The final component of costs, computer costs, was, as discussed in Chapter Two, based upon an industry average. If we were to use our lower-bound figure instead (based on telecommunications transaction costs obtained from the States) the total computer processing costs shown in Exhibit 8 would decrease from $2,878.98 to $428.64. This would also lower the total costs from $7,601.28 to $5,185.65 -- a reduction of about 32 percent. For the purpose of this analysis, however, we have used the higher estimates. We believe this is a much better reflection of true resource requirements and, to a large extent, compensates for the small underestimation of labor costs noted in Chapter Two.

SAVINGS-COST RATIOS

The last column of Exhibit 8 presents, for each site, the ratio of the savings to the costs of applicant matching. These ratios provide a convenient yardstick (i.e., dollars) for judging the effectiveness of a

particular undertaking. More importantly, by using a common frame of reference it does permit comparisons among different programs or even different parts of a program, as in this situation, across the various databases used to verify applicant information.

Overall, applicant matching appears to be very cost effective; for each dollar spent, almost four dollars in savings is realized.[29] This is a substantial gain and almost twice as good as prior research has indicated for recipient matching (see Exhibit 1, in Chapter One). But these savings are not evident for all sites. Knox, County, which did not detect any discrepancies with applicant matching, had a net loss of $446.02 (about $1.46 per application) and DeKalb County had a net loss of about $266.09 (or about $1.30 per application). The observed differences in savings to cost ratios is almost completely explained by differences in the savings that are realized from detected reporting errors. Costs are generally low and what variation there is does not appear to have a great bearing on the extent to which applicant matching is cost effective.

While costs certainly vary from site to site (ranging from a low of $1.46 per application in Knox County to a high of $6.22 in Pima County), the variation is much greater on the savings side of the ledger. Reducing costs can make effective sites more cost effective, but their position relative to other sites is far more a function of their ability to detect errors and the types of errors they discover. This is the subject of the next section.

THE EFFECT OF PROCEDURAL DIFFERENCES ON SAVINGS AND COSTS

As discussed in Chapter Three, there are four procedural aspects of applicant matching that seem to have at least the potential to affect its cost effectiveness -- the configuration of the computer system (e.g., hardware and software), who performs the different applicant matching functions, which databases are used to verify applicant-reported information, and when in the certification process a particular match is done. Each is discussed below.

---

[29] If the lower bound computer costs are used as discussed above, this would increase the savings to cost ratio from 3.79 to 5.60.

Table of Contents

Type of Computer System

The computing costs we used in our analysis were based on constant unit prices. The only causes of variation from site to site are, therefore, differences in the number of databases screened and the number of match attempts. But even if the costs had been allowed to vary, we do not believe that operational differences would affect the degree to which applicant matching can be made more or less cost effective. The cost of a single inquiry on a particular database is very low, and such costs are not dependent upon the type of terminals used, the mainframe computer on which the data reside, the type of software used, or a myriad of similar fixed costs.

Staff Assignments

With regard to the second item, who conducts both the actual computer screening and any required review and follow-up, we did observe differences in how initial screening was assigned to particular staff (follow-up was always done by eligibility workers because they are the only ones trained to work with clients). In some cases, all matching was done by clerical staff; in other cases, screening was split between clerical staff and eligibility workers with the latter generally responsible for checks against discretionary databases (e.g., motor vehicle and county-based records). But the difference in wage rates between clerks and eligibility workers was typically small, on the order of from $2.00 to $3.00 per hour. Given that the time required to do most applicant matching functions was also small (an average of about 6 minutes per application), the observed difference in wage rates is insufficient to lead to large differences in the cost of applicant matching. Again, differences in total labor costs are more the result of the number of databases that are screened (i.e., completing more matches requires more time). While there may be other important reasons for deciding who should be responsible for different functions (e.g., restricting access as a means of ensuring data security), cost is not one of them.

Use of Different Databases

Regarding the various databases that are used, we found differences in the cost effectiveness of applicant matching attributable to different information sources. As shown in Exhibit 9, with one exception, all of the data checks yield savings that exceed the costs of doing a particular match.

Table of Contents

In particular, the match against employer-reported wages,[30] and motor vehicle and property records (where these were done), are highly cost effective providing savings that exceed costs by a factor of about four or more. The wage match was done for applicants in all of the study sites. The motor vehicle and property matches, on the other hand, were typically left to the discretion of the eligibility worker. But, because an asset discrepancy can lead to a denial of eligibility (if it is large enough), it takes only a few instances of such errors to produce large savings.

EXHIBIT 9: COSTS AND SAVINGS DUE TO APPLICANT MATCHING BY DATABASE USED TO VERIFY APPLICANT-REPORTED INFORMATION

Database	Total Costs	Total Savings	Savings To Cost Ratio
Public Assistance Benefit Records	$3,117.79	$7,828.80	2.51
Wages	1,528.07	12,466.78	8.16
UI Benefits	1,106.29	3,005.82	2.72
Social Security (BENDEX)	509.25	545.33	1.07
SSI (SDX)	527.16	80.20	0.15
Real Estate Property Records	387.78	1,397.96	3.61
Motor Vehicles	424.94	2,828.19	6.66
Totals	$7,601.28	$28,786.88	--
Average			3.79

But this finding is not due solely to the comparative advantage afforded by these data sources. Different types of errors can have different

---

[30]One site, Wyandotte County, Kansas matched applicants against wage records of two States -- Kansas and Missouri. However, we are unable to dissagregate the effects for the two wage files. But the effectiveness of cross-State wage matching is not related to the data per se but to the extent to which welfare applicants seek employment in neighboring States.

effects on the size of a household's benefits. For example, an asset error, if big enough to make the applicant ineligible, will produce a relatively large transfer payment savings (i.e., the full amount of the benefit). Alternatively, an error in household composition will alter monthly food stamp benefits by about $49 for each person, but for each dollar in unreported earned income, the food stamp benefit only declines by about $0.20. Therefore, the type of error one detects will produce different savings in transfer payments purely as a result of the way various household characteristics are used to calculate benefits.

Next, not all errors are equally prevalent. Some, such as errors in SSI and Social Security income, only affect a relatively small portion of the low-income population. Others, such as errors in wages, affect a much larger portion of this population and also tend to be an area more prone to misreporting by individuals (i.e., wage errors account for the largest share of QC overpayment errors). Therefore, even if all data elements were checked with equal intensity through computer matching (i.e., if the same level of resources were expended), we would expect to find different savings-to-cost ratios simply as a result of the differential likelihood of finding various types of errors.

Finally, and most relevant to operational differences, the different data sources are not used to the same degree in the nine sites. While public assistance benefit records and wage/UI files were generally checked for all applicants at all of the sites, the other databases were both not available everywhere and, even where they were in use, they tended to be discretionary verification tools. To some extent this is due to the limited accessibility of these other data -- access was only possible through a few selected computer terminals, or the information was available on hardcopy records, or was available in a form that was very cumbersome to use (e.g., having to sort through lists of motor vehicle records of individuals with the same last name as the applicant). It is also due to the fact that eligibility workers feel that they can tell when someone is misreporting. Experience and careful interviewing techniques, they believe, enables them to decide when the use of these other data sources is most likely to result in the detection of a discrepancy.

Table of Contents

This variation in the extent to which different data sources are used for applicant matching appears to have an effect on the magnitude of the savings that sites are able to achieve. The relationship is not strong but it does seem to be the situation that screening against more data sources increases the probability of catching some type of misreporting. Excluding Knox County, the three sites having the lowest average savings per application -- Sioux Falls ($1.72), DeKalb County ($2.95), and Hudson County ($7.79) -- regularly match applicants against only two databases, public assistance benefit records and the wage/UI files. The remaining sites with comparatively high average savings (i.e., over $10 per application) employed a wide range of data sources to verify applicant-reported information including motor vehicle records, property records, and information on Social Security benefits. It would appear, therefore, that those sites which have implemented more extensive applicant-matching systems and procedures have achieved greater savings from this verification effort. In all likelihood, this is a result of the greater opportunities available to detect reporting errors.

When Matching is Done

The last procedural area is related to when applicant matching is done in the certification process relative to the intake interview. Exhibit 10 groups the study sites according to their relative savings from matching, and when applicants are screened against different databases relative to when the intake interview is done. If a relationship exists, we would expect to find sites with similar levels of savings grouped together according to the timing of applicant matching. But, as shown in this exhibit, we do not find a consistent pattern. Excluding Knox County, the low savings sites complete the matches against public assistance and UI benefit records and wage data on the same day as the intake interview; these sites complete all other matching after the interview. The high savings sites, however, complete applicant matching at all different times.

We found this surprising because, as many caseworkers told us, the importance of matching is largely related to helping them explore the applicant's circumstances during the interview. Having a complete package of match data plus the household's application far enough in advance to make the most of the verifications seems to improve the ability of local staff to

Table of Contents

uncover reporting errors. But, this is obviously not a necessity for applicant matching to be effective. Sites have been able to integrate matching into their certification process in different ways to best suit their own unique organizational structure, procedures and constraints and to make it

EXHIBIT 10: SAVINGS DUE TO APPLICANT MATCHING RELATED TO WHEN IT IS DONE IN THE CERTIFICATION PROCESS BY SITE AND DATABASE

	Day(s) Before Interview	Same Day as Interview	After Interview
Public Assistance Benefit Records			
Average Savings ≥$8	Pima, Kent, Wyandotte	St. Louis, Wake	---
Average Savings <$8	Knox	DeKalb, Sioux Falls, Hudson	---
Wage/UI Records			
Average Savings ≥$8	Pima, Kent	---	St. Louis, Wake, Wyandotte
Average Savings <$8	Knox	DeKalb,, Sioux Falls Hudson	---
All Other Data			
Average Savings ≥$8	---	---	Kent, Wake St. Louis, Pima Wyandotte
Average Savings <$8	Knox	---	DeKalb, Hudson

work successfully. This flexibility is probably one of the strengths of applicant matching. Because it doesn't require a great deal of staff labor, local offices seem to have found it relatively easy to add it to their existing application process. And, regardless of how it is done, it is an effective way to reduce overpayments due to applicant misreporting. The fact that our quantitative data do not support this hypothesis may be related to

the few observations in the study. These relationships may be more complex than can be detected from an analysis of nine sites.

UNMEASURED COSTS AND BENEFITS OF APPLICANT MATCHING

As noted in Chapter Two, this study focused on certain "measurable" costs and benefits of applicant matching. In part, this was due to the perspective we adopted and in part to our inability to measure all of the possible associated costs and benefits. This does not mean, however, that the excluded costs and benefits are unimportant. These unmeasured factors involve issues of serious concern and should be given consideration in any evaluation of applicant matching. Consequently, we obtained information from our respondents on the other effects of applicant matching. What follows, then, is a distillation of the opinions and anecdotes collected during the course of our visits to the nine sites in this study.

An almost universally voiced opinion was that applicant matching significantly improved the morale of eligibility workers by helping them to establish the integrity of their case. Obtaining computerized information on an applicant's income and resources helps give caseworker's confidence that they are accurately processing applications and awarding clients the proper amount of benefits. This computerized information has, in other words, become an important tool for helping caseworkers do their job. It helps them develop a picture of the applicant's situation without inefficient and distracting attempts to obtain or verify the information on their own. Whether or not the match data reveal a discrepancy, staff believe that a benefit is derived from having as accurate and complete data as possible on the applicant.

Next, the availability of information about individual applicants was seen to improve the delivery of services to clients. First, access to information about individual applicants allows eligibility workers to more easily meet case disposition deadlines and documentation requirements. This enables eligible applicants to receive the benefits they are entitled to in a timely fashion. Second, the computerized information can, in some instances, identify sources of assistance to which an individual may be entitled. For example, caseworkers can occasionally save some food stamp and other welfare benefits by identifying applicants eligible for Unemployment Insurance (UI) benefits. In these situations, applicants are told to apply for UI during the

food stamp application process. Third, access to computerized databases can be a way to save applicant's time. This occurs when the computer can provide verification of some aspect of an applicant's income or resources, thereby obviating the necessity for the applicant to locate and bring in the verification themselves. This can be particularly beneficial in the case of an elderly or disabled applicant for whom physically visiting the office is a substantial burden. Similarly, on-line access to vital statistics records can help a mother obtain verification of a child's birth.

There is also the possibility that matching reduces the extent to which applicants may misreport. This so-called deterrence effect is of two types, deterring misreporting on applications, and preventing fraudulent individuals from applying for benefits altogether. That is, an effective applicant matching system should deter, as well as detect, attempts to receive inflated benefit levels by the misrepresentation of personal information. (It is worth noting here that applicant matching might conceivably have the opposite effect by promoting lax interviewing by caseworkers who become dependent on applicant matching for error detection and/or provide a barrier to eligible applicants.)

It is much more difficult to measure the deterrence effects of applicant matching systems than to measure their detection effects. This is because deterrence effects cannot be observed directly. It is not possible to determine that an applicant would have provided misleading information on their application had they not believed that this information would be subject to immediate verification through a matching procedure.

In theory, deterrence effects could be estimated if aggregate time series data on benefit error (number of errors discovered during recertification, number of errors discovered during periodic, ongoing matching matches, number of QC errors, number of fraud referrals, etc.) were available for the study sites. However, because time series data were not available from the study sites, it was impossible to measure these deterrence effects without very special and elaborate data collection efforts. Instead, we queried State and local staff regarding their observations of any such changes since the institution of applicant matching procedures.

Although none of the sites had concrete evidence of deterrence effects, most people we spoke with stated that, at least some clients were not

applying because of the possibility of computer verification. Staff also generally believed that clients' knowledge that a computer will be used to check their information leads some of them to be more truthful in what they tell the caseworker. For the most part, the sites were not publicizing their use of computer matching but they seemed to believe that "the word was out" that they were doing so.

In particular, the use of a computer in the presence of the applicant to uncover or corroborate information is considered to be very useful to caseworkers during the intake interview and subsequent eligibility determination process. Applicants do not know what additional information caseworkers might have at their disposal and are inclined to overestimate the amount of data available to the agency. One caseworker commented, "If an applicant says he is not working, and you can then ask him, 'When did you quit working?' you certainly get his attention."

Finally, it is also worth noting three other potential effects of applicant matching which is worth further exploration:

- Costs to Third Parties. When a discrepancy is found through computer matching, requests are sometimes made to a third party to provide the documentation needed to either support or refute the discrepancy. For example, the difference between client-reported wages and the information obtained from the State's wage files might prompt a request to the employer for verification. This imposes a cost on the respondent to find, transcribe, and mail the desired information back to the welfare office. For a large firm, this can become a significant burden.

- Loss of Privacy. The proliferation of computerized systems of records on individuals throughout government and the private sector has raised serious concerns about invasions of privacy and an erosion of individual rights, especially when people are unaware that such data are available and being used. At least with respect to the Food Stamp Program, applicants are informed that computer verification will be used before they submit an application.

- Cost to Individuals. There are two aspects of this: (1) the costs imposed on applicants who must spend their time and resources to obtain the documentation necessary to respond to an uncovered discrepancy;

Table of Contents

and (2) the cost to an eligible individual who is either deterred from applying or who is denied benefits for a failure to resolve an uncovered discrepancy.

We mention these last items here because these are issues which have been

cannot quantify their effect, State and local officials should be aware of these concerns when developing and operating large-scale computer-assisted verification systems. For example, arrangments can be made with employers to reduce the burden placed on them to verify information (where this is done) and every effort should be made to inform applicants of their rights under the Privacy Act and to minimize the burden placed upon them.

SUMMARY

The number of applicants who have their benefits changed as a result of applicant matching is small, about 3.3 percent of submitted applications are affected. However, even though the absolute numbers are small, the applications that are affected generate a substantial amount of savings. On average, about $11.60 is saved for each application submitted.

The costs of doing applicant matching are relatively low. On average, it only costs about $3.06 for each application submitted, $1.90 in labor costs (total time per application averages about 6 minutes) and $1.16 in computer costs. When combined with the estimated savings, our results indicate that applicant matching is a very cost effective error reduction strategy. For every dollar spent to match applicant-reported information, an average of $3.79 in benefit payments and administrative costs can be saved.

Table of Contents

assigned to different types of workers. The difference in wage rates between clerks and eligibility workers was typically small, on the order of from $2.00 to $3.00 per hour. Given that the time required to do most applicant matching functions was also small (an average of about 6 minutes per application), the observed difference in wage rates is insufficient to lead to large differences in the cost of applicant matching.

- We found differences in the cost effectiveness of applicant matching attributable to different information sources. With one exception, all of the data checks were found to yield savings that exceeded the costs of doing a particular match. In particular, the match against employer-reported wages, and motor vehicle and property records (where these were done), are highly cost effective providing savings that exceed costs by a factor of about four or more. But this difference is due to a number of factors including the types of errors each database can detect and its effect on benefits, the prevalence of different types of errors, and differences in the extent to which different data sources are used by the nine sites.

- Although not a strong relationship, it does seem to be the situation that screening against more data sources increases the probability of catching some type of misreporting.

Table of Contents

CHAPTER 5

SUMMARY AND CONCLUSIONS

The purpose of this chapter is to present the overall themes and conclusions that can be derived from this study. The discussion focuses on four specific topics: the development of applicant matching; computer system per-requisites; operational procedures; and, costs and benefits.

THE DEVELOPMENT OF APPLICANT MATCHING

When we first began this project we expected to find distinct models related to how State and local agencies did applicant matching. Instead, we found that the way in which these systems have developed in recent years has led to a great deal of similarily from site to site. Two factors seem to have led to this -- the expanding use of automation in welfare programs and Federal requirements to perform computer matching for recipients of public assistance.

First, this study was done during a period of rapid evolution brought on by two concomitant factors -- an expanding use of computers to administer welfare programs and the increased availability of information on individuals that can be used to verify self-reported household circumstances. Technological developments in data processing and declines in the cost of hardware and software have provided incentives for States to increase their use of automated systems. The availability of enhanced Federal funding has further spurred this movement. In addition, Federal requirements for computer matching have both provided access to most of the data used to verify applicant-reported information and encouraged States to establish the necessary organizational arrangements associated with sharing information between different governmental agencies.

Second, all States are required to conduct periodic computer matches of applicants and recipients with various data sources including employer-reported wage records, UI and SSA benefit records and IRS data on unearned income. The mechanics of doing the actual computer matching are essentially the same for both recipients and applicants. Identifying information on the individual (e.g., SSN, name) is compared to similar data maintained in a central data file (e.g., wage records). If a match is found, the information

available on that individual is returned to the requesting party. Accelerating this process for eligibility decisions has been the next logical step in the development process because detecting errors up-front can, to some extent, reduce the number of discrepancies found later. The important factor in applicant matching as studied here, of course, is that for the match information to be useful in the certification process it must be available to the eligibility worker for use in the certification process. Under current regulations that process must be completed so that an opportunity to participate can be provided within 30 days of when an individual has submitted a signed application).

This need to provide timely information has, for the most part, led to the use of statewide computer networks which permit local offices to enter data on individual applicants and receive match results directly. However, these systems were not originally put in place for the purposes of applicant matching. To the contrary, the development of automated case management systems has provided most of the hardware, software and trained staff needed to implement applicant matching. Once available, it has been relatively easy to use or adapt these systems for other purposes such as applicant matching. On-line, interactive processing is not a necessity; overnight batch processing can be used. The basic pre-requisites for applicant matching is that staff have easy access to the match data and can get timely results.

COMPUTER SYSTEMS

The study found that applicant matching can be done successfully using various configurations and types of computer equipment and systems including: different types of computer hardware; the use of both direct mainframe computer processing and distributed networks employing mini-computers; interactive versus batch processing; and, the use of a wide range of software from COBOL to new forth-generation languages such as Natural.

If the data are already accessible by means of a computer terminal (such as with public assistance benefit records), the actual matching is a straightforward data base inquiry. All that is required in this situation is the addition of a user screen to display the results of the actual matching. This entails the addition of some programming to whatever software is being used. If the data are not currently available through on-line access (such as

as with motor vehicle and vital statistics records) the system will have to be modified. The desired data could be obtained by the Food Stamp Agency on a regular basis from the provider of the information (usually on magnetic tape) and used to update an existing data file maintained on a central mainframe computer. Access to these data could then be provided either by the addition of user screens or applicant information could be collected during the day from all local offices, batch matched against the particular database overnight and returned to the local offices the next day. Although we have used the example of overnight turnaround, this is not required; the actual response could take a few days as long as it is provided in time to be used by eligibility workers before the end of the 30 day standard of promptness.

Another method is direct on-line access to the provider's database by means of a telecommunications link. This can be done either by establishing a linkage between the State's mainframe computers (with local office matching inquiries passing through the Food Stamp Agency's computer) or by allowing each local office to separately access the provider's database. Because each link requires additional hardware (modems, controllers) and dedicated telephone lines, how a State chooses to implement their system will entail different development costs. But once in place, the selected configuration will have little effect on the effectiveness of applicant matching. The only important exception is in those instances where the computer capacity is insufficient to handle the volume of transactions leading to frequent downtimes and/or very slow responses to the user.

The final approach that can be used, of course, is a non-automated match. In this situation, hardcopy records (printouts or microfiche) would be produced periodically and distributed to local welfare offices. To verify applicant-reported information, a caseworker or clerk would have to manually search the hardcopy record to locate the desired individual(s) and, if a match is found, compare the two sources of data. Although we found that difficulty doing this sort of matching acted as a deterrent to local office staff, it may be the only option available to those States lacking the computer network necessary to do automated matching. Examples of this type of matching include printouts generated from monthly SDX tapes and lists of automobile registrations.

Table of Contents

Beyond these technical considerations, there are, of course, the organizational arrangements that must be made for the Food Stamp Agency to gain access to external data sources (e.g., motor vehicle and employer-reported wage records), including:

- deciding which data items will be made available;
- establishing matching agreements with data providers;
- identifying staff to assist with the design and implementation of the linkage;
- developing procedures to ensure the security of the data; and,
- maintaining and updating the system and its components.

If an automated system is to be used, the minimum network requirements to do applicant matching would be:

- a central mainframe or minicomputer on which the match data reside;
- at least one terminal per local office -- this can be either a 3270-type "dumb" terminal or a PC with the necessary emulation boards -- plus a printer to produce hardcopy for inclusion in case files;
- communications equipment including dedicated telephone lines, modems, controllers, and software protocols; and,
- database software to permit the user to easily access and retrieve the desired information from the central data file(s).

Specific decisions will, of course, depend upon a number of factors:

- The number of applications to be processed -- the mainframe computer and communication links must have adequate capacity and speed to handle the expected volume of transactions and to be able to provide timely responses to the users.
- The number of terminals provided in each local office should be adequate to handle the volume of applications expected in a manner that will not cause certification delays.

Table of Contents

- The number of terminals should also be sufficient to ensure that eligibility workers will have easy access to match data. The study results indicate that making the information more accessible inceases the likelihood that it will be used for all applicants.

At one time these would have been difficult tasks to accomplish. But, States have already had to make these same arrangements to comply with the requirements of the Income Eligibility and Verification System (IEVS). Consequently, staff told us that making the results of computer matching available in time to be used for eligibility determination, or adding access to another database are now relatively easy to do.

OPERATIONAL PROCEDURES

This study found that applicant matching can be done effectively with different operational structures for using the match information. The offices visited as part of this study varied in how they certified applicants for food stamp benefits including the types of forms used, staff assigned to perform various functions, and the sequencing of steps in the process. But, all were able to successfully integrate applicant matching into their certification procedures without having to give up local flexibility. The staff time required to match applicants (sites used from 2 to 7 databases) and review the results is very small (averaging about 6 minutes per application).[31] As a consequence, to add this step to an existing certification process is neither burdensome for local staff nor difficult to do once the necessary computer system is in place.

The sites included in this study made use of a wide variety of data sources, however, matching against wage and UI records and records of motor vehicle ownership accounted for about 70 percent of the applications affected by matching. Our results do seem to indicate that matching against a variety of data sources is better than focusing on only a few verifications. Because

---

[31]Average labor times range from about 3 minutes per application to 16.8 minutes per application depending upon the number of databases used and the incidence of discrepancies requiring follow-up.

the cost of doing the screening is low, identifying even a small number of misreporters generally provides savings that exceed the cost of the matching activity.

Although we were unable to discover a strong relationship between the savings and costs of applicant matching and particular operational procedures, States and local staff suggested several ways to improve the effectiveness of applicant matching:

1. Some staff believed that it was better to complete as many of the computer matches as possible before conducting the intake interview. This approach, in their view, gives the eligibility worker the benefit of this wealth of information at the time when it can be of most use. In contrast, some staff perceived greater gains from completing most matching after the intake interview thereby allowing them to review the match results with the applicant's complete story already in hand. The sites in this study matched applicants against different data sources at all different times during the 30 day standard of promptness and could still achieve important savings.

2. Targeting specific types of applicants for particular computer matches can be used (for example, matching against SDX only if the household contains an elderly member). However, matching all applicants against all of the available databases is likely to be more effective. The increase in cost is relatively small and should be outweighed by the gains from identifying additional instances of misreporting.

3. Because the time required to screen applicants and review the results is typically very small (i.e., on average 6 minutes per application) using clerical workers rather than eligibility workers to do this probably will not provide great reductions in the cost of applicant matching. But, any savings achieved can only improve the extent to which applicant matching is cost effective.

In summary, no matter how a local office chooses to do applicant matching our results indicate that a net savings will probably be achieved.

COSTS AND BENEFITS

Study results show that the number of applicants who will have benefits changed as a result of applicant matching is about 3.3 percent of the submitted applications. However, even though the absolute numbers are small, the applications that are affected generate a substantial amount of savings.

Table of Contents

On average, the study found that about $11.60 is saved for each application submitted. These savings are largely a function of the types of errors that are found (e.g. earnings, assets) and the types of households found to be in error (i.e., finding an error in a joint food stamp/AFDC case can lead to higher savings if the error affects eligibility for both programs).

The operational costs of doing applicant matching are relatively low. On average, the study found that applicant matching only costs about $3.06 for each application submitted, $1.90 in labor costs and $1.16 in computer costs. Therefore, when combined with the savings gained, our results indicate that applicant matching is a cost effective error reduction strategy. For every dollar spent to match applicant-reported information, an average of $3.79 in benefit payments and administrative costs was saved.

In addition to the quantitative savings to be realized from applicant matching, discussions with State and local staff helped us to identify a number of important ancillary benefits:

1. Worker morale is improved. Eligibility workers feel that access to computer matching information helps them to improve the accuracy of their benefit determinations and relieves them of a significant amount of the burden of verifying applicant-reported data.

2. Applicant misreporting is deterred. Although we were unable to empirically measure such effects in this study (sites did not collect this information), State and local staff reported that the implementation of applicant matching has provided an incentive for applicants to provide more accurate information.

3. On-line access to individual data can, to some extent, improve the delivery of services to clients. Caseworkers are better able to make eligibility decisions within the 30 day standard of promptness. And, for some individuals, the availability of the information can relieve them of the time and trouble to obtain needed verification documents. For example, elderly applicants can have their SSI payments verified and birth records can also be verified if the office has access to vital statistics information.

OVERALL CONCLUSIONS

On the basis of the results of this study, it appears that offices that are not now doing applicant matching, and have the necessary computer network available, should begin to design and implement the necessary systems

Table of Contents

and procedures. For those offices that are doing it now, but on a limited scale, the results suggest that they seriously consider expanding operations to include more data sources and/or to screen more applicants if they are now targeting matching to specific types of households. Once the system is in place, the cost of matching applicants appears low. Even though the number of errors detected is likely to be small, the savings in benefit payments and administrative costs should outweigh the resources required to do it.

Table of Contents

APPENDICES

A. DATA COLLECTION INSTRUMENTS USED TO ESTIMATE COSTS AND SAVINGS OF APPLICANT MATCHING

B. TECHNICAL ASSISTANCE MATERIALS

C-K. CASE STUDIES

Table of Contents

Table of Contents

APPENDIX A
DATA COLLECTION INSTRUMENTS

NOTE: Data Collection Instruments were tailored for use at individual sites. The forms provided here were used at DeKalb County, Georgia.

Table of Contents

Table of Contents

OMB _____
Expires 12/87

APPLICANT MATCHING
CASE RESULTS LOG

(CARD=01)
AAI No.: _____(2-6)
Application Date: _____(7-12)

Site/Office: GA-_____
Caseworker ID: _____(13-17)

I. HOUSEHOLD INFORMATION	Match Summary: Attempted? (1)	Match Summary: Hit? (2)	Application Information: Applicant Reported Information (3)	Application Information: Final Determination Information (4)	Application Information: For AAI Use Only (5)	
A. Case Size						
No. FS Casemembers						18,19,20-21,22-23,24
B. Earned Income						
1. Wage and Salary						25,26,27-30,31-34,35
2. Self-Employment						36,37,38-41,42-45,46
3. Other Earned Income						47,48,49-52,53-56,57
TOTAL EARNED INCOME						58,59,60-63,64-67,68
C. Unearned Income						
1. AFDC						69,70,71-74,75-78,79
2. Unemp. Comp.						80,(=02)18,19-22,23-26,27
3. RSDI (Soc Security)						28,29,30-33,34-37,38
4. Railroad Retirement						39,40,41-44,45-48,49
5. SSI						50,51,52-55,56-59,60
6. Other Dis/Retirement						61,62,63-66,67-70,71
7. Gen. Assistance						72,73,74-77,(=03)18-21,22
8. Asset/Property Income						23,24,25-28,29-32,33
9. Educational Loans/Grants						34,35,36-39,40-43,44
10. Other Unearned Inc.						45,46,47-50,51-54,55
TOTAL UNEARNED INCOME						56,57,58-61,62-65,66
D. Assets/Resources						
1. Real Estate						67,68,69-73,74-78,79
2. Bank Accounts						80,(=04)18,19-23,24-28,29
3. Motor Vehicles						30,31,32-36,37-41,42
4. Other Assets/ Resources						43,44,45-49,50-54,55
E. Deductions						
1. Medical						
a. Expenses						56,57,58-62,63-67,68
b. Deduction						69,70,71-75,76-80,(=05)18
2. Dependent/Child Care						
a. Expenses						19,20,21-24,25-28,29
b. Deduction						30,31,32-35,36-39,40
3. Shelter Deduction						
a. Housing Expenses						41,42,43-46,47-50,51
b. Utility Expenses						52,53,54-57,58-61,62
c. Other Hshld Exp.						63,64,65-68,69-72,73
d. Deduction						74,75,76-79,(=06)18-21,22

(Parts II and III over)

Table of Contents

AAI No.: _____

II. FOOD STAMP ELIGIBILITY

A. Certified? _____ (23)

B. Monthly Benefit
   1. Final Award _____ (24-26)
   2. If Prorated, Amount Issued _____ (27-29)

C. Cert. Period _____ (30-31)

D. Expedited Service? _____ (32)
   1. Amount Issued _____ (33-35)

E. Ineligible-Already on FS rolls _____ (36)

III. AFDC/MEDICAID ELIGIBILITY

A. AFDC/FS Joint App.? _____ (37)

B. Determ. Elig for AFDC? _____ (38)
   1. Monthly Benefit (Without Match) _____ (39-41)
   2. Monthly Benefit (Final Award) _____ (42-44)
   3. Cert. Period _____ (45-46)

C. Determ. Inelig for AFDC? _____ (47)

D. Determ. Pending for AFDC? _____ (48)

E. Medicaid Eligible? _____ (49)

Table of Contents

APPLICANT MATCHING
CASE RESULTS LOG DETAILED CASE CHARACTERISTICS

AAI No.: _____ Site/Office: _____
Application Date: _____ Caseworker ID: _____

	FOOD STAMP CASE MEMBERS			
	APPLICANT	CASE MEMBER 2	CASE MEMBER 3	CASE MEMBER 4
1. Case Affiliation 1 - PA 2 - NPA				
2. Relationship to Applicant				
3. Relationship to Head (if not same as applicant)				
4. Age				
5. Sex 1 - Male 2 - Female				
6. Citizenship				
7. Employment Status				
8. Institutional Status				
	50-58 (3x1,1x2,4x1)	59-67 (3x1,1x2,4x1)	68-76 (3x1,1x2,4x1)	(=07)18-26 (3x1,1x2,4x1)

	CASE MEMBER 5	CASE MEMBER 6	CASE MEMBER 7	CASE MEMBER 8
1. Case Affiliation 1 - PA 2 - NPA				
2. Relationship to Applicant				
3. Relationship to Head (if other than applicant)				
4. Age				
5. Sex 1 - Male 2 - Female				
6. Citizenship				
7. Employment Status				
8. Institutional Status				
	27-35 (3x1,1x2	36-44 .4x1)	45-53 (3x1,1,x2,4x1)	54-60 (3x1,1x2,4x1)

Table of Contents

Table of Contents

OMB No
Expires Dec. 1987

APPLICANT MATCHING
VERIFICATION ACTIVITY TIME LOG

Case No.: _____ AAI No.: _____
Case Name: _____ Site/Office: GA - _____
Application Date: _____ Caseworker ID: _____

AAI No.: _____ Site/Office: _____
Application Date: _____ Caseworker ID: _____

VERIFICATION ACTIVITY JOB TICKET

Application Match Information/Source	Date	Time Spent	Verification Activity	Job Title*	FOR AAI USE ONLY
1. DOL Wage Data	1.				
	2.				
	3.				
	4.				
2. UIB	1.				
	2.				
	3.				
	4.				
3. DMV	1.				
	2.				
	3.				
	4.				
4. FS/AFDC/Medicaid	1.				
	2.				
	3.				
	4.				
5. Child Support	1.				
	2.				
	3.				
	4.				

*If other than caseworker.

Table of Contents

AAI No. _____

VERIFICATION ACTIVITY JOB TICKET

Application Match Information/Source	Date	Time Spent	Verification Activity	Job Title*	FOR AAI USE ONLY
6. Recorder Court (Traffic Violations)	1.				
	2.				
	3.				
	4.				
7. SSI	1.				
	2.				
	3.				
	4.				
8. Property Tax Records	1.				
	2.				
	3.				
	4.				
9. Voter Registration	1.				
	2.				
	3.				
	4.				

*If other than caseworker.

Table of Contents

APPLICANT MATCHING
TIME MOTION STUDY FORM

DATE: _____ Site/Office: _____

OBSERVER: _____

ACTIVITY CODES:

01	SCREEN CASE/APPLIC. FILE	05	DATA ENTRY
02	SCREEN DES WAGES	06	OTHER SCREEN (specify) _____
03	SCREEN UIB	07	OTHER SCREEN (specify) _____
04	PROCESS VERIFICATIONS	08	OTHER SCREEN (specify) _____

	BEGIN TIME	END TIME	NO. CASES INV.	CONT. CODE	STAFF TYPE	ACTIVITY DESCRIPTION	ACTIVITY CODE
01	: :	: :					
02	: :	: :					
03	: :	: :					
04	: :	: :					
05	: :	: :					
06	: :	: :					
07	: :	: :					
08	: :	: :					
09	: :	: :					
10	: :	: :					
11	: :	: :					
12	: :	: :					

Table of Contents

Table of Contents

APPENDIX B
TECHNICAL ASSISTANCE MATERIALS

Table of Contents

Table of Contents

APPLICANT MATCHING
GUIDANCE FOR STATE AND LOCAL PROGRAMS

Table of Contents

Table of Contents

GUIDANCE FOR STATE AND LOCAL FOOD STAMP PROGRAM ADMINISTRATORS: RESULTS FROM THE STUDY OF APPLICANT MATCHING

STUDY BACKGROUND

The Food and Nutrition Service (FNS), as part of its ongoing effort to improve the efficiency and integrity of the Food Stamp Program, has encouraged the development of computerized systems for verifying applicant-reported information. This "front-end" verification is defined as the matching of applicant-reported information against independent data sources to verify income and resource information and other household circumstances prior to certification for benefits. Typically, such applicant matching includes checking wage records, benefit records for food stamps, Aid to Families with Dependent Children (AFDC), Medicaid, and Unemployment Insurance (UI) as well as other data sources that can be used to determine eligibility for program benefits.

In order to learn more about the effectiveness of applicant matching, FNS conducted an evaluation intended to: document the organizational structures and operational procedures used to implement such systems; to measure the associated costs and benefits; and, to disseminate these findings in the form of technical assistance to States seeking to implement new systems or to expand existing systems.

The report from this study[1] synthesizes the findings from case studies of applicant-matching in nine sites that were considered to be operating mature applicant matching systems. The nine sites are: Pima County, Arizona (Tucson); Kent County, Delaware; DeKalb County, Georgia (Atlanta); Wyandotte County, Kansas (Kansas City); St. Louis County, Missouri; Hudson County, New Jersey (Jersey City); Wake County, North Carolina (Raleigh); Sioux Falls, South Dakota; and Knox County, Tennessee (Knoxville). The information collected consisted of a combination of individual level data from a large sample of 2,500 applicants for food stamp benefits and in-depth interviews with State and local administrators and staff. The result is a rich source of information that combines the strengths of quantitative measures of the costs and savings associated with applicant matching with the perceptions, opinions and experiences of those who have developed and implemented these systems.

PURPOSE OF THIS DOCUMENT

The purpose of this document is to use the information from this study to assist States and local program administrators decide whether to employ the use of applicant matching in their current certification process and, if so, how to implement the necessary systems and procedures. For more detail, readers are referred to the full report which includes detailed case

---

[1] Puma, Michael J., Preventing Fraud and Abuse in the Food Stamp Program: The Use of Computer Assisted Verification of Applicant-Reported Information, Abt Associates Inc., February 26, 1988.

Table of Contents

studies of each of the nine sites. The case studies also include references of where to obtain more information on specific operational characteristics for each site.

DEVELOPMENTAL CONSIDERATIONS

Should State and local agencies do applicant matching?

The study results indicate that if basic computer support is in place applicant matching is a cost effective error reduction strategy. For every dollar spent to match applicant-reported information, an average of $3.79 in benefit payments and administrative costs can be saved. In addition, applicant matching was found to provide a number of other benefits such as improving worker morale and discouraging misreporting by applicants.

As a consequence, it appears that offices that are not now doing applicant matching, and have the necessary computer network available, should consider designing and implementing the necessary systems and procedures. For those offices that are doing it now, but on a limited scale, the results suggest that they seriously consider expanding operations to include more data sources and/or to screen more applicants if they are now targeting matching to specific types of households. Once the system is in place, the cost of matching applicants is low and even though the number of errors detected is small, the savings in benefit payments and administrative costs outweigh the resources required to do it.

What has led to the development of applicant matching?

A number of factors have contributed to the growth of applicant matching:

1. Concerns over high payment error rates have provided an incentive to States to find ways to reduce fraud, waste and abuse in public assistance programs.

2. Technological developments in data processing have made the necessary systems relatively easy and inexpensive to implement. The availability of Federal funding has also provided an incentive for States to automate their welfare programs.

3. Federal requirements to conduct computer matching for active cases has made the necessary data sources available. It is a natural extension to use these same data to check applicant information up-front before households are certified for benefits.

4. Successful experiences with computer verification in other States contributed to an environment that supported States' decisions to expand the use of computer matching to cover applicants.

Table of Contents

All States are required to conduct periodic computer matches of applicants and recipients with various data sources including employer-reported wage records, UI and SSA benefit records and IRS data on unearned income. The mechanics of doing the actual computer matching are essentially the same for both recipients and applicants. Identifying information on the individual (e.g., SSN, name) is compared to similar data maintained in one or more central data files (e.g., wage records). If a match is found, the information available on that individual is returned to the requesting party. Accelerating this process for eligibility decisions has been the next logical step in the development process because detecting errors up-front can, to some extent, reduce the amount of overissuances or eliminate from consideration those who are not eligible for benefits.

The important factor in applicant matching as studied here, of course, is that for the match information to be useful in the certification process it must be available to the eligibility worker for use during the certification process. Under current regulations that process must be completed so that an opportunity to participate can be provided within 30 days of when an individual has submitted a signed application.

How have States been able to provide match data in time to be used for eligibility determinations?

The general need to provide timely match results has, for the most part, led to the use of statewide computer networks which permit local offices to enter data on individual applicants and receive output directly. However, these systems were not typically put in place for the purposes of applicant matching. To the contrary, the development of automated case management systems and the need to match active recipients has provided most of the hardware, software and trained staff needed to implement applicant matching. Once in place, it has been relatively easy to use or adapt these systems for other purposes such as applicant matching. But on-line, interactive processing is not a necessity; overnight batch processing can be used. As long as local staff have easy access to the match data and can get results in time to be used in the eligibility determination process, the study findings indicate that applicant matching will be worth doing.

COMPUTER SYSTEMS

What computer system is needed for applicant matching?

This study found that applicant matching can be done successfully using various configurations and types of computer equipment and systems including: different types of computer hardware; the use of both direct mainframe computer processing and distributed networks employing mini-computers; interactive versus batch processing; and, the use of a wide range of software from COBOL to new fourth-generation languages such as Natural. Computer costs are low and what variation exists is unlikely to have an important effect on this relatively simple function.

If the data are already accessible by means of a computer terminal (such as with public assistance benefit records), the actual matching is a

straightforward data base inquiry. All that is required in this situation is the addition of a user screen to display the result of the actual matching. This entails the addition of some programming to whatever software is being used.

If the data are not currently available through on-line access (such as with motor vehicle and vital statistics records) the system will have to be modified. The desired data could be obtained by the Food Stamp Agency on a regular basis from the provider of the information (usually on magnetic tape) and used to update an existing data file maintained on a central mainframe computer. Access to these data could then be provided either by the addition of user screens or applicant information could be collected during the day from all local offices, batch matched against the particular database overnight and returned to the local offices the next day. (Although we have used the example of overnight turnaround, this is not required; the actual response could take a few days as long as it is provided in time to be used by eligibility workers before the end of the 30 day standard of promptness.)

Another method is direct on-line access to the provider's database by means of a telecommunications link. This can be done either by establishing a linkage between the State's mainframe computers (with local office matching inquiries passing through the Food Stamp Agency's computer) or by allowing each local office to separately access the provider's database. Because each link requires additional hardware (modems, controllers) and dedicated telephone lines , how a State chooses to implement their system will entail different development costs. But once in place, the selected configuration will have little effect on the effectiveness of applicant matching. The only important exception is in those instances where the computer capacity is insufficient to handle the volume of transactions leading to frequent downtimes and/or very slow responses to the user.

The final approach that can be used, of course, is a non-automated match. In this situation, hardcopy records (printouts or microfiche) could be produced periodically and distributed to local welfare offices. To verify applicant-reported information, a caseworker or clerk would have to manually search the hardcopy record to locate the desired individual(s) and, if a match is found, compare the two sources of data. Although we found that difficulty doing this sort of matching acted as a deterrant to local office staff, it may be the only option available to those States lacking the computer network necessary to do automated matching. Examples of this type of matching include printouts generated from monthly SDX tapes and lists of automobile registrations.

If an automated system is to be used, the minimum network requirements to do applicant matching would be:

- a central mainframe or minicomputer on which the match data reside;

- at least one terminal per local office -- this can be either a 3270-type "dumb" terminal or a PC with the necessary emulation boards -- plus a printer to produce hardcopy for inclusion in case files;

Table of Contents

- communications equipment including dedicated telephone lines, modems, controllers and software protocols; and,

- database software to permit the user to easily access and retrieve the desired information from the central data file(s).

Specific decisions on how to design the system best suited to a State's needs will, of course, depend upon a number of factors:

- The number of applications to be processed -- the mainframe computer and communication links must have adequate capacity and speed to handle the expected volume of transactions and to be able to provide timely responses to the users.

- The number of terminals provided in each local office should be adequate to handle the volume of applications expected in a manner that will not cause certification delays.

- The number of terminals should also be sufficient to ensure that eligibility workers will have easy access to match data. The study results indicate that making the information more accessible increases the likelihood that it will be used for all applicants.

Do we need a terminal for each eligibility worker?

Applicant matching does not require that terminals be provided for individual intake workers. Effective matching can be done using shared terminals or having dedicated clerical workers responsible for all matching activities.

Despite this, there are certain advantages associated with providing caseworkers with their own terminals. Local office staff indicate the conducting an applicant interview with the computer terminal on the desk of the eligibility worker provides a deterrent to misreporting by the applicant. This access to individual data also provides caseworkers with a greater opportunity to review the information during the certification process.

To the extent possible, access to the matching information should be made as convenient as possible. Having to wait to use a dedicated computer terminal or to log on and off different computer systems does appear to reduce the likelihood that eligibility workers will make full use of the applicant matching capability available to them.

Table of Contents

What about data security?

To the extent possible, precautions should be taken to prevent unauthorized access to data on individuals as required under Section 11(e)(8) of the Food Stamp Act. Procedures which can be used include: restricting physical access to computer terminals; employing the use of individualized passwords to restrict the ability of the user to carry out functions beyond that needed for a particular job; and, providing for an audit trail for all attempts to access and/or change data records.

COSTS OF APPLICANT MATCHING

What does it cost per application to do applicant matching?

The measured costs of applicant matching included only operating costs, i.e., the labor costs needed to screen applicants and follow-up on match results (labor costs included fringe benefits and overhead) and the cost of the computer transactions. Amortized development costs or fixed costs such as equipment purchases were not included. These costs, therefore, represent marginal costs or the cost to screen one additional applicant given that the capability to do applicant matching is already in place.

On average, the cost per application is $3.06 with $1.90 of this total a result of labor costs (about 62 percent) and $1.16 associated with the computer costs (about 38 percent).

The labor required to match applicants and review the results is quite minimal, on average about 6 minutes per application. Computer screening takes very little time and, because the majority of match results do not provide information that are different from what the applicant reported, most match results do not require much time to resolve. Moreover, where discrepancies are found, it is usually the responsibility of the applicant to provide documentation that either corroborates or refutes their reported circumstances. As a consequence, the cost of following-up on match results is also low.

ADVANTAGES OF APPLICANT MATCHING

How many misreporting errors will be detected through applicant matching?

Based on an examination of about 2,500 applications submitted to the nine study sites over a 3-6 week period, the incidence of discrepancies identified through applicant matching was found to be relatively low. Overall, 5.7 percent of screened applications revealed a discrepancy between applicant-reported information and the data available from an external source. However, only for 3.3 percent of the total number of applications did this discrepancy lead to a change in benefits; about 2.3 percent received reduced benefits and about one percent had their eligibility denied altogether.

Table of Contents

Although the incidence of discrepancies and benefit changes is relatively low, avoiding this level of overpayment error prior to certification could make an important contribution to reducing a State's overall payment error rates.

How much can be saved per application from applicant matching?

With one exception, all of the sites in the study realized some savings from applicant matching. On average, $11.60 was saved on each application for which a certification decision was made. Of this average amount, 55.2 percent represented reduced food stamp payments, 13.6 percent reduced AFDC benefits, 14.8 percent reduced Medicaid benefits and, 16.4 percent avoided food stamp and AFDC administrative costs.

This average savings from applicant matching, however, varied substantially from site to site. Average savings ranged from a high of $26 per application to lows of $1.72 and zero at one site. In large part, this variation is due to the number and types of error cases that are detected through applicant matching. The data we collected represent a snapshot of applicant matching at each site in this study and, therefore, are subject to some uncertainty. If we were to go back at a different time we would, in all likelihood, find different numbers of detected errors at each site and, as a result, different savings attributed to applicant matching. Consequently, the overall results based on combining the findings from all nine sites provides the best estimate of the cost effectiveness of applicant matching.

Are there other advantages to applicant matching?

In addition to the "measurable" costs and benefits of applicant matching there are other benefits that should be given consideration by State and local administrators:

- An almost universally voiced opinion was that applicant matching significantly improved the morale of eligibility workers by helping them to establish the integrity of their case determination. Obtaining computerized information on applicant's income and resources helps give caseworker's confidence that they are accurately processing applications and awarding clients the proper amount of benefits.

- The availability of information about individual applicants was seen to improve the delivery of services to clients. First, access to information about individual applicants allows eligibility workers to more easily meet case disposition deadlines and documentation requirements. This enables eligible applicants to receive the benefits they are entitled to in a timely fashion.

  Second, the computerized information can, in some instances, identify sources of income to which an individual may be entitled. For example,

Table of Contents

caseworkers can occasionally identify applicants eligible for Unemployment Insurance (UI) benefits through the match against this database. In these situations, applicants are told to apply for UI during the food stamp application process.

Third, access to computerized databases can be a way to save applicant's time. This occurs when the computer can provide verification of some aspect of an applicant's income or resources, thereby obviating the necessity for the applicant to locate and bring in the verification themselves. This can be particularly beneficial in the case of an elderly or disabled applicant for whom physically visiting the office is a substantial burden. Similarly, on-line access to vital statistics records can help obtain verification of a child's birth.

- Applicant matching can also deter misreporting. Although none of the sites had concrete evidence of deterrence effects, most staff seemed to believe that at least some clients were now being more careful when reporting their household circumstances. In particular, the use of a computer in the presence of the applicant to uncover or corroborate information is thought to be especially helpful during the intake interview and subsequent eligibility determination process. Applicants do not know what additional information caseworkers might have at their disposal and may overestimate the amount of data available to the agency.

COST EFFECTIVENESS

Is applicant matching cost effective?

The costs and savings associated with applicant matching can be combined to form a ratio that allows us to judge the effectiveness of computer verification. Overall, applicant matching appears to be very cost effective; for each dollar spent almost four dollars in savings is realized. This is a substantial gain and almost twice as good as prior research has indicated for computer verification of information for active recipients (which averaged about two to one).

LOCAL OFFICE PROCEDURES

How does applicant matching fit into the certification process?

This study found that applicant matching can be done effectively with different operational procedures for using the match information. The

Table of Contents

offices visited as part of this study varied in how they certified applicants for food stamp benefits including the types of forms used, staff assigned to perform various functions, and the sequencing of steps in the process. But all were able to successfully integrate applicant matching into their certification procedures without having to give up local flexibility. The staff time required to match applicants (sites used from 2 to 7 databases) and review the results is very small (averaging about 6 minutes per application). As a consequence, to add this step to an existing certification process is neither burdensome for local staff nor difficult to do once the necessary computer systems are in place.

When should applicant matching be done?

The sites in this study matched applicants against different data sources at all different times during the 30 day standard of promptness and could still achieve important savings. However, some staff believed that it was better to complete as many of the computer matches as possible before conducting the intake interview. This approach, in their view, gives the eligibility worker the benefit of this wealth of information at the time when it can be of most use. This is not to say that applicant matching cannot be effective if done anytime prior to the determination of eligibility. In fact, some staff perceived greater gains from completing most matching after the intake interview thereby allowing them to review the match results with the applicant's complete story already in hand.

Who should do applicant matching?

How applicant matching activities are assigned to different types of workers appears to have little effect on costs. The differences in wage rates between clerks and eligibility workers was typically small, on the order of from $2.00 to $3.00 per hour. Given that the time required to do most applicant matching functions was also small (an average of about 6 minutes per application), the observed difference in wage rates is insufficient to lead to large differences in the cost of applicant matching.

Which data sources account for the largest number of detected discrepancies?

Most of the discrepancies and benefit changes were detected through matches against a few data sources. The wage and UI benefit matches accounted for about 46 percent of the detected discrepancies and, more importantly, 54 percent of the cases with benefit changes and 57 percent of those cases that were denied. Another data source producing a large proportion of discrepancies was motor vehicle records, which accounted for 23 percent of the total.

Which databases should be used for applicant matching?

The sites included in this study made use of a wide variety of data sources, however, matching against wage and UI records and records of motor vehicle ownership accounted for about 70 percent of the applications affected by matching. In large part, this difference is due to the types and prevalence of errors each source can detect. For example, asset errors detected through motor vehicle and property records checks can, if large enough, make the applicant ineligible which leads to the potential for a large

benefit savings. In addition, the different types of errors are not equally prevalent. For example, only a few applicants can receive SSI benefits so the number of errors that can be detected with SDX matching is also small.

Study results indicate, however, that sites which match applicants against a larger number of data sources were able to achieve greater savings than those sites which focused on only a few verifications. Because the cost of doing the screening is low, identifying even a small number of misreporters generally provides savings that exceed the cost of the matching activity.

Is applicant matching equally successfully for all households?

Yes. However, certain types of households tend to have more errors. Although the differences are small, it appears that larger households, those with employed persons, and elderly households have a somewhat greater chance of being found discrepant through applicant matching. Household size probably reflects an increased opportunity for error -- the more people in the household the greater the chance for an error to be detected in reported circumstances. The presence of earnings is not surprising given the previously mentioned effectiveness of wage matching. Finally, the presence of an elderly household member is related to errors in Social Security and SSI benefits. The largest difference, however, is for food stamp only households that were found to be disproportionately represented among households found with errors.

What should be considered when choosing data sources regarding the nature of the food stamp caseload?

As noted above, the savings produced by applicant matching is largely a function of the types of errors that are found (e.g., earnings, assets) and the types of households found to be in error (i.e., finding an error in a joint food stamp/AFDC case can lead to higher savings if the error affects eligibility for both programs). Consequently, administrators should examine the types of households that make up their caseload and the types of payment errors that are causing the greatest difficulty. For example, if the caseload consists of very few SSI and Social Security beneficiaries, it is unlikely that matching against BENDEX and SDX will produce significant savings. Similarly, if an office is located in an area with large movements of workers across State borders, matching against the wage records of the neighboring States can be very effective.

What other factors should be considered when selecting a data source to use for applicant matching?

It is important to consider how well the data available from a particular data source matches the information being requested from the applicant. This involves a consideration of:

1. The frequency with which the data are updated. Data records that are frequently updated (e.g., records on UI and SSI benefits) provide a more accurate verification of the applicant's current circumstances than data that are revised less frequently such as the quarterly wage data. For

Table of Contents

example, both State employer-reported wage data and BEERS can be used to verify applicant-reported salary information. In fact, BEERS can provide information on out-of-State earnings whereas State data is restricted to wages paid by registered State employers. However, all of the sites in this study have opted to use State wage records instead of BEERS due to large differences in the extent to which the data are more or less current. Where State data are from 2 to 6 months old, BEERS data are typically 2 years old.

2. The amount of information maintained on individuals. Because it costs money to retain information on an on-line computer system and to have caseworkers review the output, careful attention should be given to providing access to only the data that are needed to determine eligibility. For example, some motor vehicle registration systems were found to provide data on all automobiles ever owned by an individual not just those currently owned.

3. The length of time records are maintained on individuals. All of the sites in this study screened applicants against records of prior and current recipients of public assistance. This provided both a way to prevent duplicate participation (by checking against records of active cases) and to obtain useful information about individual household members if they were part of a previous assistance unit. An important consideration when establishing the procedures to match applicants against these data is how long to maintain the records of prior participants. Because keeping information costs money, a tradeoff must be made between the likelihood of obtaining information from old records and the cost of providing access to these data. Consequently, States should examine both the dynamics of their caseload (e.g., the proportion of applicants that are previous participants, and the length of time that passes between spells on the program) and the extent to which household circumstances are subject to change over time (i.e., the degree to which past case record data is likely to match the current circumstances of most reapplicants).

4. The types of individuals that are included in the data records. For example, State wage files generally exclude certain types of workers (federal employees, the military, self-employed individuals, domestics, etc.) BENDEX data are usually provided only for individuals who have previously received

Table of Contents

Table of Contents

Since wage-matching provides the greatest gains, how can wage data be improved?

Access should be available to the most current records (i.e., data are updated as they are received from the employers) or to the last complete quarterly update. If possible, the former should be used in order to reduce problems associated with the age of the wage history information.

In some instances, wage data were provided in two separate files -- one containing individual records and the second containing information on employers. The individual records provide an employer code which must then be used to search the employer file to identify the source of the wages. This can be cumbersome for local staff and can reduce their desire to use the wage data. An integrated data record would be preferable.

Table of Contents

Table of Contents

APPENDICES C-K
CASE STUDIES

Table of Contents

Table of Contents

APPENDIX C

THE USE OF COMPUTER-ASSISTED VERIFICATIONS OF APPLICANT-REPORTED INFORMATION IN PIMA COUNTY, ARIZONA

For further information contact:
Arizona Department of Economic Security
Family Assistance Administration
97 E. Congress Street
Tucson, Arizona 85701

Table of Contents

ACKNOWLEDGEMENTS

This case study of applicant matching in Arizona was made possible through the the kind assistance of many people. The authors, John Agliato and Gail Simpson, gratefully acknowledge the help of: John Corral and Lillian Garcia who gave freely of their time during our site visit to Tucson; Vince Wood and Ken Chin who provided their expertise to our study in the State program office; Bill Pierce and Guy Wilson who informed us similarly at the central computer facility; the many eligibility workers in the Southside office who helped us to measure the costs of conducting applicant matching; and Sharon Malone who abstracted data from the applicant case records. We would also like to thank Melody Bacha (the Project Officer), John Hitchcock, Edward Speshock and Jill Herndon of the Food and Nutrition Service who provided useful comments and suggestions throughout the course of this project; Mike Puma who directed the study for Abt Associates Inc.; and, Dr. Daniel Finnegan who directed the subcontract for Quality Planning Corporation. Finally, the report was produced by Marsha Strother.

Table of Contents

APPLICANT MATCHING IN ARIZONA

This study of applicant matching is based on three information sources: interviews with State officials and with staff in the Southside Office in Pima County (conducted during a five-day site visit in August 1987), the abstraction of data from the application records of all individuals applying for food stamps at the Southside office during a period of four weeks; and worker time logs and time-motion studies.

SUMMARY

Operational Description. The Southside Office accepts food stamp applications every weekday beginning at 7:00am. All applicants complete a 36-page application form which corresponds, on a page-by-page basis, with the input screens from Arizona's new case management system (AZTECS). Receptionists distribute and collect applications, attaching cover sheets for in-office tracking of forms throughout the intake process. After completing and signing applications, prospective clients leave the office.

Clerical staff, called "APIS techs" (the name of Arizona's old case management system), conduct online inquiries and print match results during the "Screening and Clearing" process. APIS techs receive applications on the day of submission and match applicants against both APIS and AZTECS. (When AZTECS is fully operational, clearing on APIS will be discontinued.) A match must be conducted for every person listed in the applicant's household. Searches are initiated with Social Security Numbers (SSNs), but names are used if SSNs do not lead to matches. However, name searches are conducted only for the household head, not for every household member. Searches of benefit history records produce matches for 73 percent of applicants.

All household members are also cleared with the State's wage and Unemployment Insurance (UI) benefits database. Just over 60 percent of all match attempts with the wage database produce information. This database also includes data from BENDEX and SDX files. Very few (5 percent) matches are made with these Social Security Administration data.

Results of all attempted matches are printed and attached to applications. Existing case files are also obtained and included in these "match packets". Clerks assign cases to

Table of Contents

intake workers and schedule intake interviews within 7 to 10 days. Applicants are notified by letter and also provided with lists of required verification documents. Case files are then returned to APIS techs who "register" cases into AZTECS, i.e., keyenter data from the application form. Applicants already in APIS must also be registered into the old case management system.

During intake interviews, caseworkers review applications and verifications and attempt to resolve any match discrepancies. Applicants may be asked for further documentation; caseworkers may request information from the Department of Motor Vehicles database or send Third-Party Queries (TPQs) to the Social Security Administration.

Applicants have ten days in which to provide additional documentation. When all documentation has been received, caseworkers determine eligibility and calculate benefits. On the APIS system, most computer work is done by the technicians. On AZTECS, caseworkers directly input information. Both systems calculate benefits and initiate automatic issuance of benefits from the State office.

Incidence of Detected Discrepancies. There were 266 applications in the Arizona sample. Of these 266 cases, benefit levels for only 14 applicants were affectd by discrepancies uncovered through applicant matching; of these, three were completely denied eligibility for food stamp benefits.

Costs of Applicant Matching. The costs of applicant matching include staff labor for screening cases and for resolving discrepancies between applicant-reported and computer-matching information. They also include computer costs. Total costs for computer matching for the 266 cases at the Southside Office were $1,655.34 or about $6.25 per application.

Labor costs for computer matching are relatively low because the time required to screen applications against the various databases is minimal, taking about one minute per attempted match. Also, for most applicants the match data are not inconsistent with the information reported by the applicant. Where discrepancies are found the responsibility for resolving these problems is placed on individual applicants.

Table of Contents

Savings from Applicant Matching. The 14 cases affected by data from applicant matching resulted in overall savings of $6,915.86 in reduced or eliminated food stamp, AFDC or Medicaid payments and in avoided administrative costs. More than half of these savings can be attributed to matches made with the wage history database. Most other savings stemmed from matches with files of prior and current public assistance recipients.

The ratio of savings to costs in Arizona is 4.18 to 1, i.e., for each dollar spent $4.18 of savings is realized. Thus, in Arizona, applicant matching can be considered a very effective error-reduction strategy.

Other Benefits of Applicant Matching. Both State and local staff believe that the primary benefits of applicant matching are associated with improved case management rather than with actual reductions in the error rate. They suggest that errors created by time pressures and undue haste in case processing have been alleviated by improved computer systems which more quickly retrieve accurate information needed to determine eligibility.

Pima County has a strong privacy policy with regard to information obtained on applicants, so caseworkers do not inform applicants of the existence of match data. Thus, Pima County does not experience any deterrence effects (improved client reporting) created through applicant knowledge that their information is being checked with other data sources.

ORGANIZATION OF CASE STUDY

This case study is divided into three parts: a discussion of aspects of applicant matching that are common throughout the State of Arizona including the management and characteristics of the Food Stamp Program, the development of computer matching, a description of the databases and computer systems used, and future development plans; description of those aspects of applicant matching that are specific to Pima County (the subject of our case study) including the organization and characteristics of the Food Stamp Program in Pima County, application and verification procedures and county-level databases and computer systems; and, a discussion of the costs and benefits of applicant matching as measured in Pima County.

Table of Contents

STATE DESCRIPTION

THE FOOD STAMP PROGRAM IN ARIZONA

Food Stamp Program Administration and Organization. In 1972, Arizona created a social-services umbrella organization, the Department of Economic Security (DES), to administer the State's social welfare programs. Improving program management by integrating responsibilities and officially sharing information was a major objective of this reorganization. DES administers five programs in addition to the Food Stamp Program: Aid to Families with Dependent Children (AFDC), General Assistance (GA), Emergency Assistance (EA), the Tuberculosis Control Program, and the Supplemental Payments Program. Arizona's GA program provides assistance to individuals with temporary disabilities who do not qualify for federal Social Security Income (SSI). Finally, the AFDC program in Arizona does not provide benefits for households where both parents are present but unemployed (the so called AFDC-U program).

The Family Support Division (FSD), one of seven DES units, administers all of Arizona's public assistance programs. The Food Stamp Program in Arizona is administratively centralized, with the responsibility for day-to-day operations assigned to district and local managers. The State sets policy and administers personnel, payroll, and data-processing at all program levels.

FSD manages seven district offices, including one office which administers Native American programs. Each district office encompasses from six to twelve local welfare offices. In addition to the family assistance programs, these district offices also house programs administered by other divisions of DES, such as Social Services, Developmental Disabilities, Employment and Training, and Job Services.

Caseload Characteristics. In June 1987, the total food stamp caseload for the State was 65,917 households consisting of 200,433 individuals. Compared with a year earlier, this represents an approximately three percent increase in the number of participating persons and households. About 32 percent of the food stamp caseload also receive cash assistance. In April 1987, approximately 18,150 applications for food stamps were submitted throughout the State.

Table of Contents

Food Stamp Payment Error Rates. Since 1979, Arizona's payment error rate has more than doubled. The error rate increased from 6.4 percent in 1979 to 13.8 percent in March 1987. A State analysis of quality control errors identified three problems: no action or late action taken on client-reported information; staff acted wrongly on client-reported information; and, false information provided by clients. The State is attempting to reduce payment error rates to 4.8 percent by 1988. The use of computer-assisted verification of applicant-reported information is one part of this effort.

SYSTEM DEVELOPMENT

Creation of the Automated Case Management System. Between 1974 and 1975, Arizona installed an automated case management system -- the Assistance Payments Information System (APIS) -- for use in the Food Stamp Program. In this system, eligibility workers completed optical scanning cards, which contained data from applicants and interviews and which were sent to a central location for data entry. This system, transferred from Utah, was modified in 1977 to include the Field On-Line Data (FOLD) component. In FOLD, the workers completed eligibility documents which were routed to APIS technicians for key-entry to tape. The cumulative daily tape was run in batch at night to update the central database the next day.

The overall objective of the department's case management efforts, however, was to integrate the AFDC and food stamp information systems into one fully automated system. In 1982, Arizona began to create such a system called AZTECS. Initially, all development occurred within DES, but, by March 1984, substantial cost overruns (and the urging of federal and State reviewers) prompted DES to consider transferring an existing system from another State.

Of all the systems reviewed, only North Dakota's Technical Eligibility Computer System (TECS) met Arizona's requirement for an eligibility-worker-initiated, online-update, and eligibility-determination system. Consequently, staff reviewed the policy and procedure manuals from North Dakota, acquired and installed test tapes, and ran a sample of Arizona's quality control cases through TECS to test for design problems. The initial test worked well, so Arizona hired a consultant who worked with the project team to

Table of Contents

prepare a plan for bringing the best features of TECS into the Arizona system. DES executive staff accepted the plan in February 1986.

A capacity-planning study in March 1985, indicated the need to significantly upgrade Arizona's existing computer hardware. This goal was accomplished by adding a second NAS 9060 in tandem to the existing mainframe computer.

The modified TECS system began pilot operations in November 1986 and ran through December 1986 in one moderate-sized office. At the same time, eight eligibility workers were recruited to develop a "help desk" and training programs. The pilot test was successful, and statewide implementation began in February 1987. Case conversion was accomplished using a second-shift batch keyentry of all cases initiated since November 1986 and required about twelve months to complete

Statewide training of local office staff was conducted in Phoenix, Tucson, and Flagstaff over a period of twelve months. Training took four days for eligibility workers and supervisors, and two days for clerical staff. The Department used eligibility workers and management analysts from the core project team to help with the training. It was believed that staff would benefit more from contact with those involved in the original design of the system.

Development of Computer Matching. Linking AZTECS to wage and other databases was a natural extension of the system. In general, developing access to these data resulted from the IEVS requirement to match records on active recipients against external data sources.

Problems Encountered. State and local staff identified two problems that are related to the automated case management system rather than to applicant matching per se.

1. Ongoing system maintenance has sometimes been complicated by misunderstandings between program staff and systems programmers. This problem has been alleviated by establishing a "help desk" to serve local office staff as well as by stabilizing the pool of systems programmers. Further, there has been an effort on the part of the AZTECS project administrator

Table of Contents

to serve as a communications link among frontline staff, State office policy and management staff, and systems programmers.

2. The most serious problem has been computer capacity. Initial estimates indicated the need for a significantly larger central processor. But, because this warning was not heeded, conversion of cases from APIS to AZTECS had to be terminated. Consequently, for the near future, many of Arizona's local offices must operate both the APIS and AZTECS systems concurrently.

Development Costs. Applicant matching is completely integrated into the case-management/eligibility determination structure. Therefore, disaggregated development costs for applicant matching are not directly available. The total project development cost for AZTECS is estimated at $13.2 million. Of this amount, the cost of consulting services was $1.5 million, $3.7 million for equipment, $6.3 million for personnel, and $1.7 million for training and indirect expenses.

STATE DATA-BASES USED TO VERIFY APPLICANT-REPORTED INFORMATION

Public Assistance Benefit Records. APIS/FOLD and AZTECS are the parallel old and new case-management systems. The system differ in the organization of their screens and the logic of their menus but not in the data available for applicant matching.

Both APIS/FOLD and AZTECS gather, process, and provide online data regarding clients who are now receiving benefits or have received benefits within the last thirteen months. These systems are maintained within DES by the Office of Data Administration and are updated as information is received through the application and recertification processes. Both databases are batch updated each evening, so current data are available the next day to workers inlocal welfare offices.

APIS/AZTECS provide information only on heads of households. The identifiers used in case management and applicant matching include: case number; Social Security Number (SSN); first name, middle initial, last name; date of birth; and, gender. For applicants who have received assistance within the last thirteen months, the APIS/AZTECS match data provide: demographic descriptors such as age,

Table of Contents

gender, and race; household data including size, composition, income by amount and types, and case cross-references; information on categorical eligibility for various State social services and current recipiency status and benefit amounts; benefit history (eligibility and receipt of benefits from State categorical sources and documenation of case actions; and, a case-management process, including worker and supervisor audit trails, dates, overpayments and collections.

DES Data on Wage and Unemployment Insurance Benefits. Data on State wage and Unemployment Insurance (UI) benefits are maintained on a mainframe computer for the Division of Employment and Rehabilitation Services, the Employment and Training Administration, and the Unemployment Insurance Administration. These data are used to update APIS/FOLD and AZTECS. DES updates wage data each quarter and UI data every week.

The identifiers used for wage and UI matches include: SSN; first name, middle initial, last name; date of birth; and gender. Wage data include wages earned by quarter from employers in each of the last five quarters. Employers must report income by the last day of the month following the employment quarter. There is a lag of 30 to 180 days before wage data are incorporated. The UI data are available one-to-two weeks after benefits are paid and, because the batch update adds only one day, are current.

The major limitations of wage and UI data matching are that the wage data may be up to 180 days old and that there are no data in the system if the client has worked for the federal government, military, or non-profit or religious groups. The reliability of wage data is dependent on accurate reporting by employers.

In addition to the use of these data for applicants, all active recipients are matched against wage data quarterly and UI data monthly. If a current recipient's earnings as recorded in the DES system, differ by more than 20 percent from client-reported earnings or if reported UI benefits differ at all from those known to AZTECS, a Base Wage Match Report or an AZTECS UI Alert is sent to the eligibility worker for followup. Larger discrepancies receive higher priorities.

Table of Contents

Division of Motor Vehicles. Motor vehicle registration information is available online from the Department of Motor Vehicles (DMV) to staff in local Quality Control offices. Eligibility workers must submit written requests for checks of DMV records. Consequently, such verifications are not done for all applicants.

The primary identifier is the applicant's name. DMV does not require Social Security numbers which creates a major problem in identifying clients. For example, all records for persons with the same name must be checked.

At this time, these data are not used to verify information on active recipients of public assistance.

Other State Data Sources. For active recipients only, DES occasionally institutes matches against names of State lottery winners who receive payoffs of more than $600.00. The primary identifier for the lottery is winner's name, which is easily falsified, and names in the lottery database are not validated. In several instances DES clients have been erroneously identified and penalized as lottery winners.

FEDERAL DATABASES USED TO VERIFY APPLICANT-REPORTED INFORMATION

Social Security Administration -- BENDEX. BENDEX data are available online for individuals who have received public assistance within the last thirteen months. The system is updated twice monthly to reflect payment and program status as of the first of the following month.

For active recipients, batch matches are run quarterly. Changes appear as eligibility worker screen Alerts in AZTECS. Alert screens indicate that SSA benefits must be verified.

State Data Exchange (SDX). SDX provides information on SSI benefits paid to Arizona residents. Each month, DES receives four to five update tapes containing the most recent data. These data are loaded on the DES computers and reproduced on microfiche which are sent to local offices. Eligibility workers use the fiche to check benefit amounts for applicants.

For active recipients, batch matches are run quarterly. Changes appear as eligibility worker screen Alerts in

Table of Contents

AZTECS. Alert screens indicate that SDX benefits must be verified.

State and local staff see SDX data as timely and of good quality. Data are usually current, within one or two payroll periods, and cover all Arizona residents, so the system can be used for applicant matching. Use of the microfiche is, however, somewhat cumbersome.

Third-Party Query. When verification of SSN or Social Security benefits from federal BENDEX or SDX is needed, and either the applicant is not in APIS or AZTECS or the APIS/AZTECS data needs to be verified, a third-party query (TPQ) gathers data prior to application disposition. To request a TPQ, an eligibility worker completes an optical scan card that is then forwarded to SSA. The primary identifiers used are SSN or claim number, client name, and an office code. Turnaround time from SSA is two to three days. For the most part, these data are current and useful if benefits are reported by clients. The information, however, does not automatically enter the State data system. TPQ information is obtained only if requested by caseworkers.

Other Federal Data Sources. The other Federal data sources, BEERS, IRS 1099s, and SSN enumeration validation are used only for quarterly matches with records of active recipients of public assistance.

COMPUTER HARDWARE AND SOFTWARE

Central Computer. The databases used for applicant matching are currently maintained on two separate computer systems. The APIS data are processed on a Honeywell DP 6600, while the AZTECS databases are maintained on two NAS 9080s operated in tandem. State wage and UI benefits data and BENDEX data are also maintained on the AZTECS NAS 9080 tandem mainframe. Both systems are operated by DES's Office of Data Administration (OAD).

Matching on APIS and AZTECS are conducted in batch for active recipients and online for applicants. Batch updates for both databases are run overnight. APIS data are carried by tape from the NAS 9080 tandem mainframe, which functions as the communication hub, to the Honeywell DDP 6600 computer; AZTECS data are batch run directly on the NAS 9080s to update that database.

Table of Contents

Communications. An IBM 3725 Communications Controller manages the data flow between terminals in local welfare offices and the central processor via leased telephone lines. This system links, by high speed modem, remote field site ITT Courier controllers which are then connected by coaxial cable to "dumb" IBM 3270-type terminals on the desks of clerical and eligibility staff. Hardcopy printouts are provided by desk-top impact printers connected to the same 3270 controllers.

The current data communications monitor is IBM's Customer Information Control System (CICS/OS/VS) which supports the interface between end-users and the teleprocessing method, Virtual Telecommunications Access Method (VTAM). VTAM provides a transparent network for the direct transmission of data between terminals in session and application programs, as well as management and monitoring functions.

In general, telephone lines and the multitude of controllers have been the weakest link in the telecommunications chain. OAD believes that installation of a microwave network will reduce telephone line outages and that their internal repair service will limit controller down-time.

Software/Operating System. The central computer runs under the Multiple Virtual Storage operating system in Extended Architecture (MVS/XA) designed to perform system control programming in online, interactive networks. The ADABAS language is used for data-management programming and Supernatural for data query.

Security. ACF-2, from The Cambridge Systems Group, Inc., is used as the primary data security tool. It controls access to data files, program libraries, and batch jobs. ACF-2 permits multiple levels of control, by terminal, application and/or function, and by passwords that must be updated monthly to protect against unauthorized attempts to disclose, modify, or destroy data. Security profiles are established for different classes of users (for example, read-only access to data) and access is also limited by geographic service areas. Finally, any activity resulting in a data change is recorded on a system transaction log. The log serves as the audit trail for transaction level processing.

Table of Contents

Physical security is maintained by limiting public access at local offices and by placing terminals in restricted areas. Workers monitor traffic during work hours, and doors are locked after hours.

FUTURE DEVELOPMENT PLANS

Full AFDC/Food Stamp Program implementation of AZTECS will be completed in June 1988. The conversion of the remaining State programs (vocational rehabilitation, General Assistance, State supplemental payments, tuberculosis control, and medical assistance) will begin in June 1989, with a projected completion date of June 1990. At that time, all APIS functions will cease and the conversion to AZTECS will be complete.

Administratively, Food Stamp Program benefits are provided in the same fashion throughout the State. No special matches presently exist for Native American populations in Arizona. The Federal Bureau of Indian Affairs (BIA) has discussed access to State data to facilitate administration of the commodity subsidy programs on the Arizona reservations. However, as FNS programs are administered on the reservations as district entities, little need was expressed by State staff for access to BIA data. Further, as BIA does not support computer systems, it is questionable whether sharing data is feasible.

Arizona and New Mexico have run computer matches on recipients of public assistance in both States. These matches were discontinued in January 1987 because no actual matches were found. An interstate match between California and Nevada could be informative, as State staff believe Arizona residents work in California as field laborers and in Nevada in the casinos. A match with California is considered particularly difficult, however, because all of California programs are county-administered.

Table of Contents

APPLICANT MATCHING IN PIMA COUNTY

THE COUNTY FOOD STAMP PROGRAM

Pima County operates seven local public assistance offices, four of which are in Tucson. One of these four offices, the Southside office, is the subject of this case study.

About 60 percent of Southside's food stamp caseload of approximately 7,040 households are PA food stamp cases. Although there is minor seasonal variation in participation (higher in fall and winter), the annual caseload has been relatively stable during the past seven years.

Of the 3,500 actions this office processes each month, 250 are new NPA applicants and 300 are new PA applicants. Many of these applicants, however, are returning to the program after a short break in benefits receipt.

Staffing and Organization. Southside has a staff of 75: a local office manager, seven supervisors, 37 caseworkers, 16 secretaries, and 14 clerk-typists. The local manager has overall administrative responsbility for the office and reports to the District II program manager.

Five of the seven Southside supervisors are eligibility worker supervisors. These supervisors review every tenth certification for each of the eight-to-ten caseworkers in eligibility units. One supervisor manages the clerk-typists, and the fifth oversees the secretaries who serve as computer technicians.

Caseworkers must have a minimum of two years of experience working with the public and a high school or general equivalency diploma. Caseworkers are responsible for both intake and ongoing case management, for both PA and NPA cases. They are assigned intake cases on a rotating basis. Ongoing cases are assigned alphabetically to workers. Twice a year, ongoing caseloads are adjusted to maintain equity in worker assignments. A formula based on case action requirements, rather than on number of cases, is used to ensure equitable distribution of workload. The average Southside caseload is about 185 cases per worker.

Sixteen secretaries have primary responsibility for computer-related activities. They are called APIS technicians ("techs") because their responsibilities evolved with the

Table of Contents

development of the old case-management system. They check applicant-reported data from applications against existing databases and print out any matching information, enter new cases into the system, and enter case data and benefit amounts after eligibility is determined.

During the transition from APIS to AZTECS, the responsibilities of APIS techs are in flux. AZTECS allows caseworkers to handle case management using online terminals, so the need for a specialized data-processing unit is reduced. APIS techs, however, still check and print match data for applicants and for quality reviews (after eligibility determination) for AZTECS cases.

The 14 clerk-typists staff the reception desk, make appointments, prepare correspondence, and track and maintain case files.

COUNTY DATABASES USED TO VERIFY APPLICANT-REPORTED INFORMATION

Staff in the Southside office have access to all of the databases described earlier in this case study. No additional county-level databases are used for applicant matching.

COUNTY HARDWARE AND SOFTWARE

Currently, the Southside office has available one computer terminal for every three caseworkers. Because Pima County does not employ the use of county-level records for applicant matching, no additional hardware or software is used beyond that described earlier.

APPLICATION AND VERIFICATION PROCEDURES

This section describes the food stamp application process in the Southside office in downtown Tucson. Exhibit 1 provides a simplified flow chart of local operations.

In the Southside welfare office, case processing for food stamp applications essentially involves four steps:

Step 1 -- Initial intake,

Step 2 -- Online screening,

Step 3 -- Intake interview and verifications, and

Step 4 -- Follow up and benefit determination.

Table of Contents

EXHIBIT 1: THE FOOD STAMP APPLICATION PROCESS

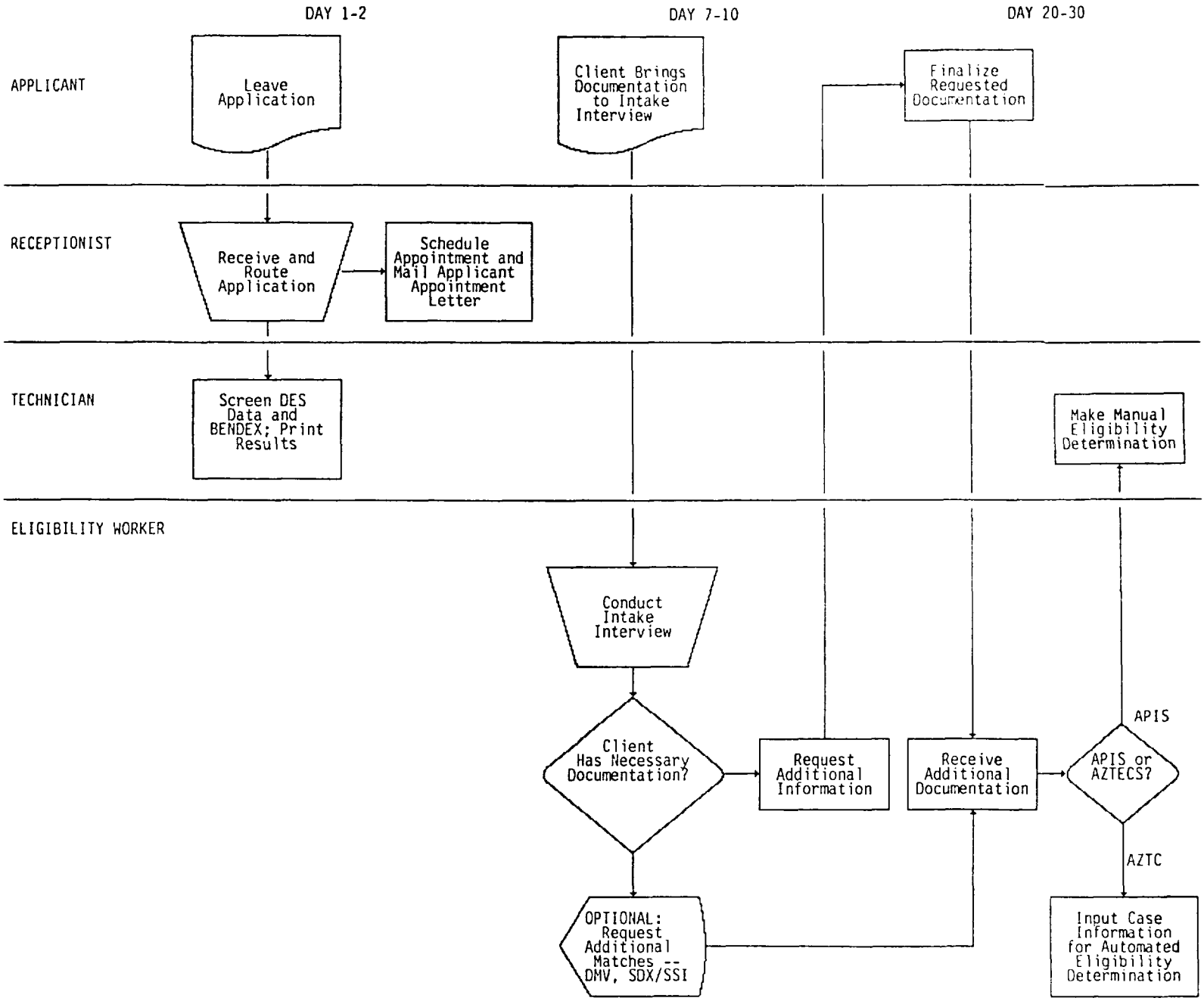

Table of Contents

The third step includes most of the actual computer matching.

Step 1: Initial Intake. The Southside Office opens at 7am each weekday. People are often waiting in line for the doors to open to apply for assistance or to keep previously scheduled appointments. Typically, there will also be a number of expedited food stamp applicants who are scheduled for immediate interviews.

New applicants, applicants whose certification has lapsed for more than thirty days, and food stamp recipients coming for periodic recertification must complete a 32-page application form. Although very long, the form is clearly explained and clients complete only a few pages prior to their interviews. The application corresponds on a page-by-page basis with the AZTECS input screens.

Applications are distributed from, and returned to, the front desk, where two clerk-typists act as receptionists. A receptionist briefly reviews each form for completeness and signature, attaching a green cover page to track the form through the intake process. Although recertification clients submit new application forms, they do not go through the intake procedure outlined in the flow chart; they are sent directly to their caseworkers. Expedited food stamp applications are also flagged and separated from other cases.

After submitting completed applications, most clients leave. Expedited food stamp clients may wait for appointments or may return the next morning for service.

Step 2: Online Screening. In the Southside office, a specialized staff of secretaries (called "APIS techs") conduct the initial online inquiries and print the match results, a process called "Screening and Clearing." Completed applications are routed to APIS techs either the day the application is submitted or, if submitted late in the day, the following day. APIS techs first review (or screen) applications, looking for completeness and consistency in client-provided information as well as for information to identify the household or its members during the online computer "clearing."

During the conversion from APIS to AZTECS, applications must be cleared on both systems. Ongoing cases remain on APIS

until the Statewide computer capacity grows to accommodate the State's entire caseload on AZTECS. New applicants, defined as persons who have no prior case history on APIS, are entered only on AZTECS.

Clearing consists of accessing and printing online match data on all household members. It is mandatory that matches be attempted for each individual in the household. Each database is accessed in turn, to look for data on each person listed on the application.

The techs begin clearing by attempting matches on the APIS subsystem called Field On-Line Data (FOLD). From the APIS/FOLD main menu, an APIS tech starts the search by entering the applicant's Social Security number (SSN). If the SSN identifies a client as known to the system, at least five screens will be printed for inclusion in what is referred to as the "match packet." The data printed include: case identifying information; address; the names and SSNs for all prior case members; prior case status (date opened, date closed, pending status, location of office, caseworker); benefit summary for all family assistance programs; and payment history for food stamps and AFDC.

For those household members not included in prior cases, another search is made by individual SSNs to see whether these persons appear as recipients in other households known to the system. If an applying household member is already a part of another recipient household, screens relating to that household or case are printed and included in the match packet that is later provided to the assigned caseworker.

If the SSN is not known to the system, the tech continues the search using the applicant's name. By scanning a list of identical and similar names (a "soundex" match) and dates of birth of persons known to the system, the APIS tech sometimes can match an applicant to a case, even when an inaccurate SSN has been provided. Name searches are routinely conducted only for applicants, not for other household members. Alternate spellings are not routinely tried. If no information is found on an applicant in the APIS system, the tech is required to also clear on AZTECS. AZTECS encompasses approximately the same case history data as the APIS/FOLD system.

Table of Contents

Beyond the mandatory clearing, APIS techs have a certain amount of discretion in pursuing and printing pertinent information from the two databases. Thorough searches on all household members are time-consuming for large households, but both systems appear to offer considerable latitude for workers to aggressively pursue client searches. A worker may search for names and SSNs by checking alternate spellings and aliases and reviewing SSNs of all case members.

Local office staff estimate that as many as 80 percent of applicants are known to the system at the time of application. That is, they were previously receiving public assistance benefits. Therefore, the screens printed during the APIS/FOLD or the AZTECS clearing as an excellent source of information for eligibility determination.

Clearing is also mandatory using information from two other data sources that interface with APIS and AZTECS. First, data on applicants' wages and UI benefits, for the previous five quarters are available online from the State DES unemployment database. Second, the verification subsystem also screens for matches on the BENDEX database; for those applicants known to the system, data include Social Security and partial SSI payments made to the applicant within the previous three months. These materials are also included in the "match packet". (APIS techs attach printouts, even when there is no match, to show that the clearing process was completed.)

If the applicant is known to the system, the clearing and screening process also alerts the tech to the existence and whereabouts of existing case files. If the case file is not in the Southside Office archive, the case file is requested from the appropriate local office. It is also merged into the match packet.

Step 3: Intake Interview and Verifications. The application and match packet go to the appointment desk, where a clerk assigns it to an intake worker and schedules an appointment for 7 to 10 days from the date of application. The case file goes back to an APIS tech to be "pended" (the term used for APIS cases) or "registered" (the term used for AZTECS cases). To pend or register a case means to enter the appointment date and caseworker assignment onto the client's computer file. This entry allows the caseworker access to

the file and initiates the automated case-tracking activities. Following the pend/registration step, a clerk sends a letter to each applicant informing him/her of the appointment date and reminding the applicant to bring verifications to the appointment.

Application files are stored by appointment date. Each morning, a clerk gives caseworkers the files of the clients they are scheduled to see that day. Caseworkers are assigned four hour-long interviews each morning, beginning at 8am. Afternoons are reserved for case processing. Before an interview, caseworkers customarily spend ten to twenty minutes reviewing the case file and the match findings. If clients fail to keep their appointments, they are automatically scheduled for second appointments and are sent appointment notices. Up to 30 percent of the scheduled appointments do not take place as scheduled. No-show slots are filled by clients, particularly expedited food stamp cases, who have chosen to wait hoping to be seen that day.

During each interview, the caseworker reviews the application and the verifications provided by the applicant. Discrepancies between match data and information provided by the client tend to fall into only a few categories:

Household composition. The match data may reveal information about past household participation in State public assistance programs. Comparing household composition information may lead to a discussion about the whereabouts of various household members.

Participation in other income-maintenance programs. Match information may also alert a caseworker that a household member is being counted and given benefits in another household or another assistance program.

Earned income. Discrepancies between applicant-reported and computer-verified wage data are often found. However, because the data tend to be several months old, discrepancies are generally due to this lag rather than to applicant misreporting. Despite this, knowledge of prior employers and wages is viewed as valuable background for guiding the interview process and for identifying other needed verifications.

Table of Contents

Unemployment benefits. Discrepancies between applicant-reported UI benefits and match data are relatively uncommon. However, occasionally a client is not aware that s/he is eligible for unemployment benefits. The match data informs the caseworker when there are outstanding benefits for which the client may apply. The client will then be required to apply for UI benefits, and the food stamp allotment will be reduced accordingly.

Social Security and SSI. Although these data rarely indicate a discrepancy, caseworkers seem to rely on it to verify information for elderly applicants. These applicants can also be saved the burden of getting letters verifying SSI income, if the match data supports their benefit claims.

During the interview, the caseworker discusses any discrepancies apparent from the application, match packet, and existing case file.

Step 4: Followup and Final Determination. Caseworkers may choose to obtain additional information after initial interviews. In addition to asking applicants for further documentation, caseworkers may:

request computer match information from the Department of Motor Vehicles, using a form sent to district headquarters; or

request a match against Social Security records using a third-party query to SSA; or

review in-house microfiche of SSI benefits from SDX.

Clients have ten days after their interviews to provide any additional documentation required by their caseworkers. Applications are held in pending status until 30 days after the application date. If documentation is not provided, cases are automatically denied. Any file can, however, be reactivated within the next 30 days if documentation is provided. Approximately 40 percent of the applications received by the Southside office are denied, primarily for failure to keep appointments or to provide necessary information.

When a client has furnished all the required documentation, the caseworker determines food stamp eligibility and calculates benefits. Eligibility determination procedures are different for APIS and AZTECS cases. An APIS case is completed using procedures that have been in place for several years. Caseworkers calculate benefits using a "scratch pad" function on their computer terminals. Workers input budget information, and the automated budget worksheet calculates benefits. Caseworkers send decision letters to clients containing eligibility determination results and benefits. Case files and input documents are sent to APIS techs. Techs review the files and enter case data and benefit amounts into the computer. Arizona is a direct-mail issuance State; food stamp coupons are automatically sent the next day from the Food Stamp Issuance Unit at the State office in Phoenix. The case file is sent to the assigned ongoing caseworker.

AZTECS cases are completed online by caseworkers. Input screens match the application form page-for-page, assisting caseworkers in entering case data. The computer automatically calculates benefits. Caseworkers print copies of worksheets and budgets for case files. As with APIS, decision letters and food stamp coupons are sent the next day from the State office. Case files are returned to APIS techs, who review the files before they are forwarded to ongoing caseworkers.

Table of Contents

THE EFFICACY OF THE APPLICANT-MATCHING SYSTEM IN ARIZONA

This section discusses the effectiveness of applicant matching in Arizona. First, results of a quantitative cost-benefit analysis are summarized. Then, the qualitative perceptions of local and State staff on the utility of applicant matching are reported and explored, including effects on error rates and deterrence effects.

Measurable Costs and Benefits of Applicant Matching. The costs of applicant matching include staff time to both screen cases and follow up on discrepant information, as well as costs associated with using the computerized databases. The staff time spent on screening was measured through time motion studies, while follow-up time was measured through worker time logs associated with each case. Estimates of computer charges were derived from conversations with appropriate personnel.

The benefits of applicant matching include reductions in benefit payments based on information obtained from matching, as well as denials of benefits to clients who would have been certified in the absence of matching information. These benefits were measured by abstracting information from a sample of cases (266 that went through to final certification or denial) on (1) applicant-reported household situations; (2) the household situation on which final benefit determination was based; and, (3) whether any identified changes could be attributable to computer matching. Changes attributable to applicant matching were translated into changes in food stamp, AFDC and Medicaid benefits and projected over the period of time during which the applicant would have received the overpayments.

Information Obtained from Applicant Matching. Information obtained from applicant matching in Arizona included data on the applicant's current and prior receipt of benefits from the Food Stamp Program and other programs such as AFDC, data on the applicant's recent wage history, data on receipt of unemployment benefits and data on receipt of Social Security benefits (both SSI and regular Title II benefits). Each of these data sources was accessed 100 percent of the time for the sampled cases.

Table of Contents

There was wide variation among data sources in the frequency with which matches (or "hits") were obtained. The highest level of hits occurred with benefit history records, where 73 percent of attempts produced information about applicants. The next highest was wage history, where 61 percent of attempts produced at least some information the applicant. In contrast, the level of hits was very low for checking Social Security benefits -- about 5 percent for both SSI and Title II benefits.

Even where matches occurred, they rarely uncovered discrepancies with applicant-reported information. The proportion of matches that uncovered discrepancies was generally under 10 percent; for some data sources, like SSI benefits, there were no discrepancies.

Costs of Applicant Matching. The costs of obtaining matching information were generally quite low. Total costs for matching the 266 completed cases were only $1,655.34 or about $6.25 an application.

About 25 percent of total costs are associated with accessing computerized databases--about $0.26 for each attempt. The remaining costs can be attributed to staff time for screening and following up on match results.

Staff costs are low because performing matches on computer terminals is not a time-consuming process. Generally speaking, matches took less than one minute to perform, producing a very low staff cost of about $0.23 cents an attempt.

Similarly, follow-up on match results required very little caseworker time. For most applicants the match data are not inconsistent with the information reported by the applicant. Where discrepancies are found the responsbility for resolving these problems is placed on individual applicants.

Benefits of Applicant Matching. Benefits from applicant matching can occur where benefit levels are affected by the results obtained from computer matching or where denials can be attributed to these results. In Arizona, there were 11 instances where benefits were affected by discrepancies uncovered through applicant matching, and an additional three denials were attributed to applicant matching.

Table of Contents

This result produced a total benefit savings of $6,915.86. Of this total, by far the largest proportion was associated with wage matching. database. Savings from this one database alone were over $3,600, or over half of the total amount. The next largest savings were from screening case history files -- a little under $3,100. The savings from matching unemployment benefits files were only about $200.

Finally, matching on some databases produced extremely small savings or none at all. Matching on regular Social Security benefits saved only $6.30, while matching on SSI benefits saved nothing at all.

Relationship of Benefits to Costs. Overall, the benefits of applicant matching in Arizona, substantially outweighed the costs. The ratio of benefits to costs was 4.18 to 1, (i.e., for every dollar spent on applicant matching, $4.18 was saved) and the net savings (savings minus costs) were $5,260.52.

The most effective database, from the standpoint of net savings, was wage matching which generated a net savings of almost $3,400, almost two-thirds of the total. Matching on the case history database, netted a little over $2,200 in net savings; matching on unemployment benefits led to net savings of about $50.

Matching on some databases actually lost money. Matching on Social Security benefits, both regular and SSI benefits, led to a net loss of about $130 for each database. The costs of matching, while low, were measurable, while no benefits could be identified.

In general, applicant matching in Arizona appears to be very cost-effective. This cost-effectiveness is somewhat surprising in light of how few errors seem to be uncovered through applicant matching. However, even a small number of applicant errors, when translated into a monthly benefit savings and projected over time, seem to outweigh the low costs and produce a favorable benefit-cost ratio.

Table of Contents

STAFF PERCEPTIONS OF APPLICANT-MATCHING EFFECTIVENESS

Both State and local staff believe that the primary benefits of APIS and AZTECS are associated with improved case management rather than with direct error rate reduction or deterrence of client misreporting.

Effect on Payment Error Rates. Management staff view Arizona's error rate as a serious problem. A recent management review identified the need to focus attention on a broad-based quality control error reduction effort. Consequently, Arizona has embarked on an error-reduction campaign, "4.8 In '88," designed to cut the State's payment error rate to 4.8 percent by 1988.

However, given implementation problems with AZTECS, as well as the lack of hard data on the topic, staff did not have strong views on the efficacy of applicant matching in reducing error rates. No one would unequivocally endorse the effectiveness of applicant matching in detecting discrepancies in client-supplied information.

The general view seems to be that applicant matching may be somewhat helpful in detecting client errors, however, overall improvements in case management were really the key to bringing down the error rate. To the extent that applicant matching facilitates such improvements, it can affect the State's error rate. For example, staff believe that computer matching to verify client situations can not only acquire data more quickly but can also eliminate errors caused by hasty manual checking.

Deterrence Effects. Staff acknowledged the possibility that the existence of computer matching for applicants might deter some misreporting of information. However, they had no direct evidence of such an effect and were reluctant to attribute deterrence as an advantage of applicant matching.

Given the fact that some counties, including Pima, have an "invasion of privacy" policy, which specifically prohibits caseworkers from revealing the existence of match data, it hardly seems surprising that staff were not more sanguine about deterrence effects. If clients are not informed about the existence of computer matching, it seems unlikely that matching can deter them from misreporting.

Table of Contents

Effects on Case Processing. Both State and local staff emphasize the benefits of applicant matching with regard to case processing. With immediate access to more information, local caseworkers are more likely to complete the eligibility determination process within the required timelines. Also, local workers consider the case of locating previous case files an important operational improvement. These benefits help caseworkers to meet their day-to-day responsibilities and are thought to increase staff morale and job satisfaction, which, in turn, are thought to positively affect staff productivity and to reduce errors.

Staff expect that caseworkers' use of match data will increase as AZTECS is fully implemented. Under the APIS system, all computer access is assigned to APIS techs. Caseworkers complete the determinations, then send the case files to APIS techs to review and to enter benefit authorizations into the computer. In contrast, under the AZTECS system, caseworkers complete case determinations online and enter the benefit authorizations. AZTECS stores much of the case data on the database and automatically calculates benefits.

Thus, the transition from APIS to AZTECS will increase the online computer use of the average caseworker. During the time of the field visit, the AZTECS system was still so new that only a few caseworkers had mastered it, and they were the acknowledged local experts. Some caseworkers admitted to never using the computer themselves. As caseworkers are required to process more cases on AZTECS, their use of match data will increase.

Table of Contents

APPENDIX D

THE USE OF COMPUTER-ASSISTED VERIFICATIONS OF APPLICANT-REPORTED INFORMATION IN KENT COUNTY, DELAWARE

For further information contact:

Department of Health and
Social Services
Division of Economic Services
P.O. Box 906
New Castle, Delaware 19720

Table of Contents

ACKNOWLEDGEMENTS

This case study of applicant matching in Delaware was made possible with the kind assistance of many people. The author, Michael Puma, gratefully acknowledges the help of: Margot Cella, who accompanied me on the site visit; Ruth Cambell, Norman Clendaniel, Ibrahim Madanat, Marvin Thomas and many others too numerous to mention, who gave freely of their time during our visit to Delaware; the many eligilbility workers in the Milford and James Williams State Service Centers who helped us to measure the costs of conducting applicant matching; and Loretta Baker who abstracted data from the applicant case records. I would also like to thank Melody Bacha (the Project Officer), John Hitchcock, Edward Speshock and Jill Herndon of the Food and Nutrition Service who provided useful comments and suggestions throughout the course of this project. Finally, the report was produced by Marsha Strother.

Table of Contents

APPLICANT MATCHING IN DELAWARE

This study of applicant matching is based on three types of information: interviews with State officials and local staff from the Kent County welfare offices conducted during a five day site visit in July 1987; the abstraction of data from the application records of all individuals applying for food stamps in Kent County during a period of six weeks; and, worker time logs and time motion studies.

SUMMARY

Operational Description. Generally, applicants seeking public assistance in Kent County must appear in person between 8am and 4:30pm Monday through Friday. Initially, they will be asked to complete two forms by the receptionist -- a screening form that collects only limited identifying information on each individual for whom benefits are being sought (e.g., name, Social Security number) and a long application form that collects detailed information about each individual related to eligibility for benefits including sources and amounts of earned and unearned income, resources, and expenses.

The screening form is completed first by the applicant. While the individual completes the full application form, the receptionist uses the screening form to match each household member against the Delaware Client Information System (DCIS), the State's online integrated case management system. This check, done for essentially all applicants, determines if anyone in the household is currently receiving, or has received in the past, food stamps, AFDC or Medicaid benefits anywhere in the State. This ensures against duplicate participation and, if the applicant was a previous beneficiary (a match was found in about 80 percent of the cases checked), provides prior case information that can assist eligibility workers to make a correct determination regarding the recent application.

After the applicant has completed the application form the receptionist checks it for completeness, schedules an intake interview usually for the next day, and provides the applicant with a list of verification documents they will need to bring with them.

Table of Contents

In the afternoon, the receptionist conducts a second computer match for all applications received during the day. This is the online screening of all individuals 16 years of age or older against records of employer-reported wages and Unemployment Insurance (UI) benefits. Although done on the same computer terminal, she must log-off DCIS and log-on to a separate mainframe computer to conduct these matches. This match is done for about 70 percent of the cases but, unlike the DCIS screening, a match is found for only about 16 percent of the applicants checked.

Information obtained from any matches is printed out and attached to the application forms. These are then forwarded to the assigned eligibility worker who will conduct the client interview.

There are four other computer verifications available to eligibility workers that can be done prior to the client interview but these are generally done at the eligibility worker's discretion: match against motor vehicle records (checked for about 28 percent of the applicants, yielding a match about 40 percent of the time); BENDEX and SDX records of Social Security and SSI benefits (checked for about 20 percent of the applicants yielding a match about 62 percent of the time); and State birth records. Information on Child Support Enforcement records can also be obtained by a telephone call to the administering agency. (Child Support on-line inquiry became available in 8/87).

During the interview, the eligibility worker reviews all of the information provided by the applicant as well as any discrepancies uncovered through the computer matches that have been done (e.g., unreported wages). In most cases, the burden of resolving such discrepancies is placed upon the applicant; eligibility workers do not conduct independent verifications such as contacting employers unless clients indicate they are unable to obtain information and request assistance.

Incidence of Detected Discrepancies. Of the 264 applications that went to final determination or denial, only 6 had a discrepancy that was detected through applicant matching and which affected the household's benefits; one of these five was an outright denial.

Table of Contents

Costs of Applicant Matching. The cost of conducting applicant matching consists of the labor needed to screen client-reported information, the associated computer costs, and the cost of resolving any discrepancies that are detected. For the 264 applications in our sample, the total cost of applicant matching amounted to only $447 -- an average of less than $2 per application.

There are three reasons why the costs are so low: the time required to screen an application on the computer is only a few minutes; computing costs are generally small for such simple transactions; and, the number of discrepancies detected is relatively small, and for the most part, the burden of resolving them is placed on the applicant.

Savings From Applicant Matching. Even though only five cases were found to have benefit changes, these cases generated about $3,540 in savings from reduced transfer payments (i.e., food stamps, AFDC and Medicaid) and avoided administrative costs. About 85 percent of these savings were a result of the match against wage records with the balance coming from the DCIS screening.

Combining the savings and costs produces a benefit cost ratio of 7.4, i.e., for each $1 spent on applicant matching almost $7 is saved. Clearly, applicant matching is very cost effective despite the low incidence of detected discrepancies. The costs are very low and the benefit savings associated with the small number of errors is large when projected over the time period during which the overpayments would be expected to be paid in the absence of applicant matching.

Other Benefits of Applicant Matching. In addition to the quantitative benefits noted above, State and local staff pointed out a number of other important benefits attributable to applicant matching: the presence of a computer terminal during the client interview may lead clients to conclude that the eligibility worker can verify information being supplied about their circumstances; clients are deterred from misreporting because they don't know how much information caseworkers have access to; and, the morale of caseworkers is

Table of Contents

improved because they feel that they are more efficient and accurate in their determinations.

ORGANIZATION OF CASE STUDY

This case study is divided into three parts: a discussion of aspects of applicant matching that are common throughout the State of Delaware including the management and characteristics of the Food Stamp Program, the development of computer matching, a description of the databases and computer systems used, and future development plans; a description of those aspects of applicant matching that are specific to Kent County (the subject of our site visit) including the organization and characteristics of the Food Stamp Program in Kent County, application and verification procedures, and county-level databases and computer systems; and, a discussion of the costs and benefits of applicant matching as measured in Kent County.

Table of Contents

STATE DESCRIPTION

THE FOOD STAMP PROGRAM IN DELAWARE

Food Stamp Program Administration and Management. The Department of Health and Social Services (DHSS) was created in 1970 as part of an overall reorganization of the Delaware State government. DHSS is responsible for the statewide health and social services delivery system. Contained within the Department are the Divisions of: Aging; Child Support Enforcement; Economic Services; Mental Health; Mental Retardation; Public Health; Visually Impaired; Business Administration and General Services; Planning, Research and Evaluation; and, State Service Centers.

Responsibility for operating the Food Stamp Program (FSP) and other income-maintenance programs resides with the Division of Economic Services (DES). In addition to the Food Stamp program, DES staff are also responsible for administering Aid to Families with Dependent Children (AFDC), Medicaid (MA), and State-funded General Assistance (GA); under AFDC, Delaware also provides assistance to those households having both parents present but unemployed (AFDC-UP). DES also administers the Purchase of Day Care for Children and Adult Day Care programs.

DES is comprised of four support units at the State Administrative Office (personnel, administration, information systems, and staff development), three Medicaid units (one in each county), an employment and training program office, a policy unit for AFDC, FS, and General Assistance and a policy unit for Medicaid, and thirteen county public assistance offices.

The Food Stamp Program in Delaware is a State-administered and supervised program. Because of the State's small geographic size, an intermediate organizational level (such as a regional or district supervisory system) is not needed.

Caseload Characteristics. DES annually issues about $130 million in benefits to needy persons. Since 1984, participation in income maintenance programs has been declining because of Delaware's comparatively low unemployment rate. With regard to the Food Stamp Program, although the rate of decline has slowed, a comparison of the first nine

Table of Contents

months of 1986 to the same period for 1987 shows an approximately 11 percent reduction in program participation during this time period.

Food Stamp Payment Error Rates. Delaware's Food Stamp Program has a comparatively low payment error rate. As of June 1987, the error rate was down to 3.8 percent from 6.1 percent the previous year. For the most part, the reduction in payment error is considered to be "...a result of the many system matches which produce an abundance of information about the clients." Moreover, the incidence of payment errors caused by agency actions is now higher than the incidence of client-caused errors.

SYSTEM DEVELOPMENT

Creation of the Automated Case Management System. The development of applicant matching in Delaware is tied to the creation of an integrated computerized human services case management system. The availability of this technology made it relatively easy to extend the capability to verify client-reported information at the time of certification.

In the latter part of 1978, the State Governor began a long-term effort to enhance Delaware's data processing capability. As part of this initiative, the Governor and the head of DHSS began work on the design and development of the Delaware Client Information System (DCIS) in order to fully automate recordkeeping and eligibility determination for all of the State's public assistance programs. After a decade of effort the system is still evolving and expanding to meet the changing needs of Delaware's social service programs.

At the time the project was initiated, a decision was made to place primary responsibility for the design of DCIS with DES. If the system was to serve the needs of clients and front-line workers it would have to be created by people with first-hand experience with the administration and operation of public assistance programs. The Information Systems Unit was, therefore, created within DES. The unit was staffed with a combination of personnel drawn from the DES policy unit, staff development unit and included one systems analyst.

Actual development of DCIS began in November 1979. The first phase consisted of four main activities: documentation of current operations and procedures; an analysis of the required functions the system would have to perform; the development of a conceptual design for the DCIS system; and, the identification of a transfer system.

In the initial planning, rather than creating a system from scratch Delaware decided to modify an existing automated system to meet their needs. Staff conducted visits to a number of States having such systems and, on the basis of these results, determined that Georgia's Public Assistance Reporting and Information System (PARIS) most closely met Delaware's needs. The final activities of the first phase of development involved the preparation and submission of an Advanced Planning Document (APD) to obtain Federal funding for the system from Department of Health and Human Services and the Department of Agriculture; and, the comparison of Georgia's and Delaware's policies and procedures to assist with the adaptation of the PARIS system.

The second phase of development began in 1982 with the preparation of a Request for Proposals (RFP) to obtain the services of an outside contractor to: design the overall system structure required to implement all DCIS functions; design the DCIS data base including elements, files and relationships; develop a detailed system design and implement the required programming; create a test data base and implement a system test; prepare user manuals, training materials, and system documentation; conduct user and technical staff training; initiate a pilot test and, if successful, implement the statewide system; and, monitor system performance for 12 weeks after the completion of full-scale implementation.

The RFP was issued in November 1982 with an award made in January 1983 to Electronic Data Systems (EDS); Federal approval of the contract award was received within a few weeks. Throughout the development process, State staff worked closely with the contractor's personnel. Early in the project the decision to transfer the PARIS system had to be abandoned for a number of reasons (including lack of documentation available). Instead a system was developed

using original coding plus modifications to existing coding. The Information Systems Unit of DES staff was responsible for installing the equipment in the local offices and training the staff in their use. Telex maintains the equipment under a contractual arrangement with DES.

A pilot test was originally planned for one county office, however, project development considerations and case conversion factors led to full statewide implementation at one time. Therefore, by April 1984, the DCIS system was online in all county offices. A dual system was operated before this as cases were converted to DCIS format and entered into the new master client database. Centrally printed forms for all current cases were produced in September 1983 that included basic identifying information for each case. These were sent to their respective case-workers to complete by transcribing data from existing hard-copy case files. Data were then key entered by data entry clerks in the local offices. This conversion process began in December 1983 and was completed by April 1984.

Initial DCIS training was conducted for local office staff by the Information Systems Unit. All local office staff were trained together at a central location for a period of two days prior to the start of converting active cases to the DCIS system. The process of conversion afforded local staff an extended period of on-the-job training prior to full scale operation of the system. New workers are now trained as part of an extensive program of classroom and on-the-job training that includes public assistance program policies and procedures (5 days each for AFDC and food stamps), interviewing techniques (2 days) and DCIS procedures (2 days). Continued training for system changes are handled by Delaware's County Auxiliary Training System (CATS). Under CATS, each office has designated trainers (usually supervisors and/or lead workers) who have been taught to be instructors by the State's Staff Development Office. These individuals are trained centrally and then return to their respective offices to instruct local staff.

Development of Computer Matching. Once DCIS was in place, it was a natural extension to link the system to other data sources outside of DES. The first of these was the State's

Department of Labor (DOL) wage and Unemployment Insurance (UI) files. Prior to IEVS, Delaware was conducting tape-to-tape matches with DOL data with hardcopy printouts being provided to caseworkers for verification of discrepancies. With the completion of DCIS, Delaware saw the opportunity to go to online access to DOL data thereby saving the expense associated with handling paper documents.

The Director of DES initially contacted DOL to request online access to wage and UI data explaining the purpose and the expected benefits to the State. Because of the strong support of senior officials, the necessary arrangements were quickly completed by members of a task force consisting of representatives from both agencies. Training of local office staff took place in December, 1985 and the interface became fully operational in January 1986.

Similarly, Delaware DES had started negotiations with DMV and Vital Statistics before the requirements of IEVS were promulgated by the Federal government. IEVS provided the incentive to push ahead and DCIS provided the infrastructure necessary to accomplish the linkage. Because the Division of Vital Statistics is part of DHHS, arrangements to access these data were straightforward; it only involved intra-departmental coordination. This interface became operational in March 1987. The link to DMV, however, was more difficult. Because DMV could not modify their file structure to meet the needs of DES, the DCIS system had to be specifically tailored to accept the information. This interface became operational in October, 1986. An on-line interface with Child Support System became operational in August 1987).

Problems Encountered. State staff identified four areas of difficulty; for the most part, these relate to the automated case management system DCIS rather than applicant matching per se:

- The consultant hired to develop and implement the initial DCIS system should have played a greater role in staff training and the development of user manuals.

- The design of the DCIS system is such that it uses more computer memory than desired. State personnel are currently working to remedy this situation.

Table of Contents

- Because the system is online it is particularly difficult to modify and update. Major changes require the system to be shut-down and it is hard to find a convenient time to schedule the work.

- The DOL interface was initially designed for limited access; individualized passwords were required by DOL and only two were assigned to a local office. Because case-workers found this restriction a problem, the passwords were shared among workers. This increased the use of the interface and caused excessive levels of downtime. DOL has hired a consultant to upgrade their system in order to provide DES with improved service.

Development Costs. The cost of developing the initial DCIS system was $2,182,799; enhancements and modifications for Part-B approval are estimated to cost $2,435,814. These costs cannot, however, be disaggregated to identify the cost of applicant matching per se.

DES also reimburses DOL $15,000 per year for matching activities (recipients and applicants). About $5,500 of this amount represents the cost of renting data processing/telecommunication equipment necessary to operate the online interface between DES and DOL (this represents 64 percent of the full cost -- the balance is paid for by other DHSS users). The remainder, $9,500, covers the cost of supplying wage and UI data on magnetic tape as part of the IEVS requirements.

STATE DATABASES USED TO VERIFY APPLICANT-REPORTED INFORMATION

Public Assistance Benefit Records. Information used to determine eligibility for AFDC, food stamps, GA, or Medicaid is obtained from the applicant for each individual in an assistance unit (e.g., a food stamp household) using a single application form. These data are then entered into Delaware's online automated case management system -- the Delaware Client Information System (DCIS).

Prior to certification for benefits, each individual listed on the application form is screened against the Master Client Index (MCI) which allows a determination of whether the

Table of Contents

individual is currently, or has ever been, a recipient of public assistance benefits in Delaware. If no match is found, a unique identification number is assigned and the client is registered on the MCI. The system also assigns a separate identification number to each assistance unit, so a record is created for each AFDC, food stamp, and Medicaid case. The data are separately processed and evaluated by the system in accordance with the distinct program financial eligibility rules and regulations; incomplete applications are held in "pending" status by the system until final eligibility determinations are made.

The component of DCIS most important to applicant matching is the "inquiry function." All application data entered on the system, as well as data acquired through automated system interfaces (e.g., IEVS matches), or generated from internal system processing (e.g., benefit calculations), are available for display on a network of computer terminals located at DES offices throughout the State. (Data from each screen can also be obtained in hard copy from printers in each DES office). Active public assistance recipients are not screened through DCIS to ensure against duplicate participation. However, caseworkers are provided with any relevant information on recent case actions (e.g. changes in AFDC grants that would effect food stamp benefits).

From the DCIS Master Menu, caseworkers are able to make database inquiries at three separate levels: by DCIS case; by type of program assistance provided (food stamps, AFDC, or Medicaid) and, by client. This inquiry function does not allow the user to update any of the displayed information.

When making an inquiry at the DCIS case level the menu allows the user to access information on: case number; current program status; date of application; address (mailing, payee, and prior); case program participation history (dates and benefit amounts); individual client information including identification number, name, aliases used, medical data, resources, earned and unearned income; case level financial data (resources, income by source, deductions); benefit issuance history; and, recoupment/overpayments. More detailed information by type of program assistance can also be obtained.

When making an inquiry at the client level the user can search the system database by identification number, Social Security number, or name. (Gender can also be used as an optional qualifier.) If the spelling of the client's name is uncertain, the user can also select a phonetic search option. If a name search is selected, the system will display all matched client names with their associated gender, race, birth dates, and identification numbers. The user must then select the individual who is the current applicant. For each client, the following information is available: birth date, age, gender, race, marital status, address, Social Security number, citizenship, school attendance, aliases used, program benefit history, case affiliation history, resources, unearned income sources and amounts, employment data, and medical insurance information.

After applicant information is entered into DCIS, data are processed through the On-line Financial Eligibility Determination/Benefit Calculation Component which computes the household's allotment. For each allotment, the system generates a notice informing the household of its eligibility, how its benefit was computed and the benefit amount. Copies of these notices are forwarded to caseworkers for inclusion in paper case files. Every month the system also produces Monthly Report forms to be mailed to most AFDC and food stamp cases, benefit checks, ATP cards, and/or Medicaid cards.

A record of each activity performed by the system is accumulated, and, each month, hardcopy reports are produced on application activity, caseload distribution, numbers and types of case status changes (for example, number of closed cases or number of benefit reductions), required actions, overdue actions, and other similar administrative information.

DOL Wage and Unemployment Benefit Records. This database is maintained by the Delaware Department of Labor (DOL) to administer the State's Unemployment Insurance (UI) program. The database includes all individuals within the State who are working for wages or salaries, with the important exception of people working for the Federal government or the

military. In addition, the system excludes persons who work for a private non-profit employer with fewer than four employees.

Wage data are based on reports from employers. A wage record for an individual contains information for six quarters and includes: name, address, gender and SSN of the individual; total wages received by the individual in each of the six quarters; name, primary type of business, and address of each employer from whom the individual received wages (up to three employers are available); and amount paid to the individual by each employer in each of the six quarters. Individual records can be accessed by SSN.

UI data are DOL's internal records of transactions and information relevant to paying out unemployment benefits within the State. A UI record for an individual contains information for one year and includes: name, gender, date of birth, address, and SSN of the individual; eligibility status for UI; duration, dates, and amounts of claims within last year; benefits paid out, including check amounts, numbers, and dates; and benefits remaining to be paid out. These data are accessed by individual SSNs.

The currency of the two sets of data varies dramatically. The wage data, which are based on quarterly reports from employers, are typically three to five months out of date. At the end of each quarter, employers have a month to send in data and typically wait until the last possible moment. Once received by DOL, the data must be key-entered by clerical workers, and the database updated through batch processing. This process is further complicated because of the volume and varying formats of the data submitted by employers.

The UI data, in contrast, are updated weekly. Although there may be some minor lags before paper records are entered, files are generally updated almost immediately.

Access to the DOL data is provided through a special interface component built into the DCIS system which provides a telecommunications link with the DOL mainframe computer. Through an agreement with DOL, direct online access to these data is available daily between 8am and 4:30pm.

Table of Contents

These data are also used to match against records of active recipients of public assistance as required by IEVS. These tape-to-tape matches are conducted quarterly for wage data and monthly for UI benefits. For active recipients, UI data that is sent from DOL to DCIS is used to automatically update client records and recalculate eligibility and benefit levels.

DMV Motor Vehicle Records. The Department of Motor Vehicles (DMV) maintains a database of its official internal records of motor vehicle registration and related transactions for all motor vehicles registered in Delaware. Access to these data is through a separate communications link to the DMV computer.

The database includes a listing of all motor vehicles registered to a given individual, and, for each vehicle, the following information: name and address of owner/lessor; make and model of vehicle; title number; and, tag and operator license numbers. The DMV database is generally accessed using names as identifiers, but it is possible to search by tag number. This procedure is rarely done in welfare offices.

The data are relatively up-to-date in terms of registration and re-registration transactions, although there is some lag because of delays in online entering of paper records. However, the database is frequently vastly out of date, when it comes to title transfers and the like. it is possible for a vehicle to be listed in the name of a person who has not owned it for years. When a match is found, any automobile ever owned by all persons with this name is provided. Consequently, it is up to the caseworker to determine which record applies to the applicant for which the search was originated and if the automobile is currently owned.

These data are not used to match against records of ongoing recipients of public assistance.

Vital Statistics. DES has also entered into an agreement with the Division of Public Health in DHHS to provide online access to vital statistics records. Access to these data is

also through a separate communications link and is only for verification; information cannot be added, deleted, or modified. These data extend back to only 1968 (a plan is now being developed to extend the database to 1962) and, of course, include only births occurring in Delaware.

Birth records are identified by the first and last name of the mother (for married women the maiden name is used). The structure of the data record is as follows: child's name and gender; date and time of birth; county and place of birth (hospital); mother's maiden name, age, place of birth and residence; and father's name, age, place of birth, and residence.

These data are not used to match against records of ongoing recipients of public assistance.

In addition to the databases described above, Delaware has attempted a number of other matches but these were only done for active recipients:

- On a single occasion, food stamp recipients were matched against the records of current Job Corps participants.

- Similarly, public assistance recipients were once matched against a list of all current State employees.

- The Fraud Unit has matched food stamp recipients against files maintained by the State Revenue Division to check for tax payments (a hardcopy printout was returned to the counties).

- In 1985, a special study was conducted by an external consultant in Kent County to examine the efficacy of Credit Bureau matches. Eligibility workers selected a sample of 65 suspicious cases and these were then matched with Credit Bureau files to determine if the client had an employment history. Of the 65 cases matched, 45 matches were found of which 15 warranted further investigation. Seven cases were eventually found to have received overpayments totally $25,000. Local staff believe this to be a good investigative tool except for women who have changed their name through marriage.

Table of Contents

Finally, the capability to perform interstate matches with New Jersey exists, however, no use has yet been made of this source of information.

FEDERAL DATA BASES USED TO VERIFY APPLICANT-REPORTED INFORMATION

BENDEX Benefit Records. The BENDEX database is built by the State using data from monthly tapes provided by the Social Security Administration (SSA). (SSA also sends supplementary update tapes between the monthly submissions.) These data cover only those individuals receiving food stamps, AFDC, or MA in Delaware and include all new information about Title II benefits received by these individuals. BENDEX tapes are loaded almost immediately onto DCIS and generally contain information up through the latest benefit month.

These data are also used to match against records of ongoing recipients on a monthly basis.

SDX Benefit Records. The SDX database is similarly built by the State from data received from the Social Security Administration (SSA). Every month, SSA sends Delaware a master tape of data on State residents who receive SSI payments. The data on the tape cover SSI benefits through the latest benefit month. Data processing personnel load this information into the DCIS as soon as the tape arrives. At any given time, the database contains four months of SSI data, including the data from the last month loaded, plus history data from the three previous tapes.

These data are also used to match against records of ongoing recipients on a monthly basis.

Third Party Query (TPQ). These can be used when an eligibility worker needs data on SSA and SSI benefits to determine client eligibility. For an applicant who is not known to the system, there would be no online data available. A TPQ optical scan card is completed by the worker and sent to the local SSA office. This card is scanned at SSA; the request is transmitted to the same local SSA office and returned to the DES county office usually within three weeks.

BEERS and IRS 1099 Records. These data sources, matched on a monthly basis, are only used to verify records of ongoing

recipients of public assistance. Applicants are not included in these batch matches.

COMPUTER HARDWARE AND SOFTWARE

Central Computer. The Delaware Department of Health and Social Services has developed four separate online computerized record-management systems to support different social service areas: a patient accounting system for hospitals and community-based facilities; a foster care program information system; a management and accounting system for the Child Support Enforcement program; and, DCIS for income maintenance programs.

The key feature of this integrated system is the Client Oriented Record Entry (CORE) system - the central record file that contains the Master Client Index used to initially screen applicants. Because the diverse divisions of DHSS administer different Federal or State programs that serve the same clients, it is more efficient to create a client record once regardless of how the individual enters the public assistance system. Some client information is shared (i.e., can be entered and updated) by any division within the Department; other client information is unique to a particular program and can be entered and updated only by the division administering the particular program. This ensures that the Department has an unduplicated record for all clients who are receiving services or benefits from any one or more of the ten different divisions of DHSS. The CORE system, which resides on the State's central computer at the Biggs Data Center in New Castle, has been designed such that it is relatively "invisible" to users of the individual systems. It functions as an integral part of each system rather than as a "stand alone" subsystem.

The DCIS system currently meets about 80% of FAMIS certification criteria; the State is now in the process of modifying and improving the system to obtain FAMIS certification. The mainframe computer is an IBM 4381-GRP2 with 16 megabytes of memory. Also included are the following peripherals:

- Disk control units: IBM 3880-1 and Memorex 3888; 3680 DASD (16 Spindles, 10.0GB) and 3375 DASD (16 Spindles, 6.4GB).

Table of Contents

- Tape control units: Memorex 3286, 6 tape drives (6250/1500) Memorex 3288.

- Printers: 2 IBM 3203-5.

The existing hardware is adequate to meet the State's needs, however, recent concerns have surfaced related to the DOL computer on which the wage and UI data reside. (This is a separate system which is accessed through DCIS.) The problem is primarily related to excessive levels of downtime (approximately 10 percent). As a consequence, DOL has hired a consultant to work with them to upgrade the system in order to provide DES with improved services. The primary cause of the problem appears to be overuse of the system; more staff are trying to access the system than was planned for in the original design. When an overload situation occurs caseworkers must typically wait 3-4 minutes for a screen to change. Similar problems have not been encountered with the other interfaces (i.e., DMV and Vital Statistics).

Communications. An IBM 3274-A31 communications controller (32 ports) and a Contem 3690 controller manage the data flow between local computer terminals and the central processor. This forms the link, via leased telephone lines and local controllers, that connect "dumb" Telex model 078 terminals on the desks of clerical and eligibility staff. Local hard copies are provided using desk top impact printers.

The current data communications monitor is IBM's Customer Information Control System (CICS/OS/VS) which supports the interface between end users and the teleprocessing method, ACF/VTAM (Advanced Communication Function/Virtual Telecommunications Access Method). VTAM provides a transparent network for the direct transmission of data between local terminals and application programs, as well as management and monitoring functions.

Software and Operating System. The operating system used on the central mainframe computer is IBM's MVS/SP-JF52 designed to perform system control programming in large online interactive computer networks with heavy utilization. The primary programming languages for DCIS is IBM's Patient Care

System/Application Development System (PCS/ADS) for on-line processing and COBOL for batch processing. However, many other software packages are also available to users.

Security. Terminal access is requested by local offices for individual eligibility workers. Eligibility workers have individual logons/passwords for DCIS; system entry can be limited to inquiry only, inquiry and update, etc. However, the system does not automatically keep track of unauthorized access attempts.

With regard to the DOL interface (which requires a separate password), DES initially arranged to have only two passwords per local office (one for the supervisor and one for the lead worker). What actually happened was that the passwords were simply passed on to all of the workers in the office in order to facilitate access to the data. This resulted in multiple people in each office trying to access the DOL system thereby leading to the current overload problem. DES is presently instituting new procedures to restrict passwords to individual workers (using their initials).

For Vital Statistics and DMV there are no individualized passwords and logons; a single access code is used that has been assigned to DES. In both cases, workers are limited in terms of the data to which they have access to regarding individuals (e.g., through DMV, traffic violations data cannot be obtained).

FUTURE DEVELOPMENT PLANS

Because some of the desired DCIS functions were not originally installed, DES issued a second Request for Proposals (RFP) in May 1987 to design and implement the remaining modifications to conform with federal FAMIS certification requirements. In addition, the plans include further improvements to existing system components in order to improve overall system performance, and to meet the data processing requirements of federal sponsoring agencies (including food stamp and Medicaid agencies.)

Another modification that is currently underway is the provision of direct online access to records maintained by the Child Support Enforcement Division. Expected to be completed within one year, this linkage will enable

Table of Contents

caseworkers to verify the amount of child support payments being received by applicants that have been referred for State enforcement. (Completed in August 1987).

Delaware has also pilot tested a match of public assistance recipients with Credit Bureau records that appears to show positive gains. Although no immediate action was taken, interest now seems to be increasing. Apparently, Pennsylvania has been operating a limited Credit Bureau match and has found that it is very cost effective (a benefit to cost ratio of 37 to 1). Not only can income and resource factors be identified via this match, but also other factors such as, household composition, and absent parents (relevant to AFDC). Various options to implement such matches are now being considered by the State that may be implemented in the near future.

The State is also considering the elimination of the use of data input and turnaround documents. Implementation of a "paperless" system would improve local program operations and increase efficiency.

Table of Contents

DESCRIPTION OF APPLICANT MATCHING IN KENT COUNTY

THE FOOD STAMP PROGRAM IN KENT COUNTY

Delaware operates 13 welfare offices statewide. The office described in this case study is located in Kent County. The office serves county residents as well as clients living in the nearby towns of Ellendale, Lincoln and a portion of Greenwood in Susex County.

There are three local welfare offices in Kent County: the James Williams State Service center, the Milford State Service Center, and the Lockerman Street Office. Only two of these offices, however, accept new applicants -- the James Williams and Milford State Service Centers. The three Kent County offices have a combined caseload of 5,762 food stamp recipients in 2,134 households. This constitutes approximately 19 percent of Delaware's total food stamp caseload.

Staffing and Organization. The James Williams State Service Center (JWSSC) employs a supervisor, nine full-time caseworkers, one part-time caseworker, a receptionist, and a clerk. Staff at the Milford State Service Center (MSSC) include a supervisor, nine full-time caseworkers, and 3 clerk/typists.

In both offices, intake and ongoing case-management functions are separated. (In fact, workers responsible for ongoing case management at JWSSC are physically housed in the nearby Lockerman Street office.) At the JWSSC, 4.5 full-time equivalent (FTE) caseworkers are responsible for both food stamp and AFDC applicants while one person handles only food stamp applicants. At the MSSC, four FTE caseworkers handle intake and all are responsible for both food stamp and AFDC applicants.

COUNTY DATABASES USED TO VERIFY APPLICANT-REPORTED INFORMATION

Staff in Delaware's local welfare offices have online access to all of the State and Federal databases described earlier in this case study. There were no additional county-level databases used for applicant matching in Kent County or anywhere in the State.

Table of Contents

COUNTY HARDWARE AND SOFTWARE

All the counties in Delaware have accessibility to applicant-matching capabilities for the State databases, with all local offices having terminals connected online. Initially DCIS access was restricted to specially trained data entry workers because of the cost of installing a large telecommunications network all at once. The current ratio is about 1 terminal for every 2 or 3 workers. This was done for the following reasons:

- the need for eligibility staff to inquire into the online interfaces with the Department of Labor, Motor Vehicles and Vital Statistics;
- to respond to client inquiries and resolve problems;
- to provide workers with a number of online capabilities to create and modify client notices;
- IEVS requirements to ensure that eligibility staff report back to DCIS the results of their followup activities on discrepant information; and,
- to provide eligibility staff with special software packages to allow them to test the effects of changes that are reported by clients on prospective eligibility.

To meet these needs, DES embarked on a long-term plan to provide a terminal for each staff member engaged in applicant interviewing, eligibility determination, benefit calculation and other direct client/case maintenance activities. For staff involved in other functions such as client screening and registration, the goal has been to achieve a ratio of one terminal for each two staff members. To achieve these goals, required a total of 240 additional terminals. Statewide there are now approximately 125 terminals.

State personnel view such accessibility to be a true cost saving. The previous limit of only a few terminals available in each office resulted in staff lining-up to use them causing great inefficiencies. As a consequence, local offices pressured the State to move to the current allocation of terminals. Also, the wider access is viewed by the eligibility workers as something which reduces the time

needed with the clients because it provides immediate feedback while the client is still in the office thereby eliminating subsequent contacts.

Because county specific databases are not used in Kent County, no additional computer hardware is used beyond the terminals needed to access the central computer system.

APPLICATION AND VERIFICATION PROCEDURES

This section describes the general food stamp application process in two local offices: the James Williams and Milford State Service Centers. Exhibits 1 and 2 provide simplified flow charts of operational procedures for each office. In these offices, case processing for food stamp applications essentially involves four steps:

- Step 1 -- Initial intake,
- Step 2 -- Verification including computer matches,
- Step 3 -- Intake interview, and
- Step 4 -- Followup and benefit determination.

There are some interoffice procedural variations, however, within each office procedures are similar for all applicants.

Step 1: Initial Intake. New applications are accepted between 8am and 4:30pm Monday through Friday. Clients/applicants queue to be checked in by a receptionist, who determines whether each person sees an ongoing caseworker or is initially applying for public assistance. In both offices, if the client wishes to apply for assistance, the receptionist provides them with a DES Application Screening Form. Information from this form facilitates screening of applicants' names through DCIS.

The DES screening form asks for basic information -- name, address, spouse's name -- and whether or not the applicant was ever known by another name. It also asks what program the applicant is applying for (cash assistance, food stamps, Medicaid, or emergency assistance), whether or not they are currently receiving assistance (or if they received benefits

Table of Contents

EXHIBIT 1: THE FOOD STAMP APPLICATION PROCESS: WILLIAMS STATE SERVICE CENTER

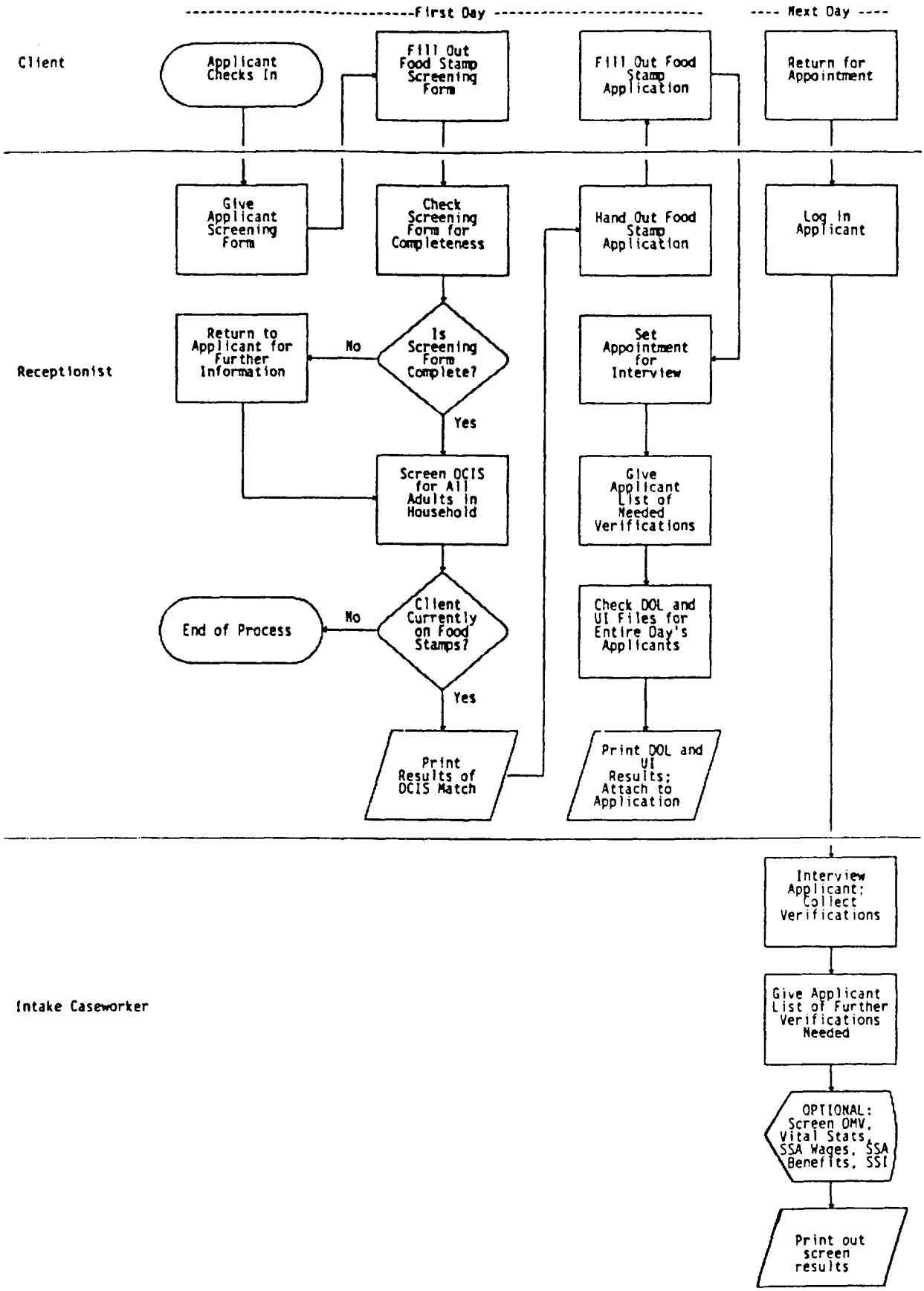

EXHIBIT 2: THE FOOD STAMP APPLICATION PROCESS:
MILFORD STATE SERVICE CENTER

Table of Contents

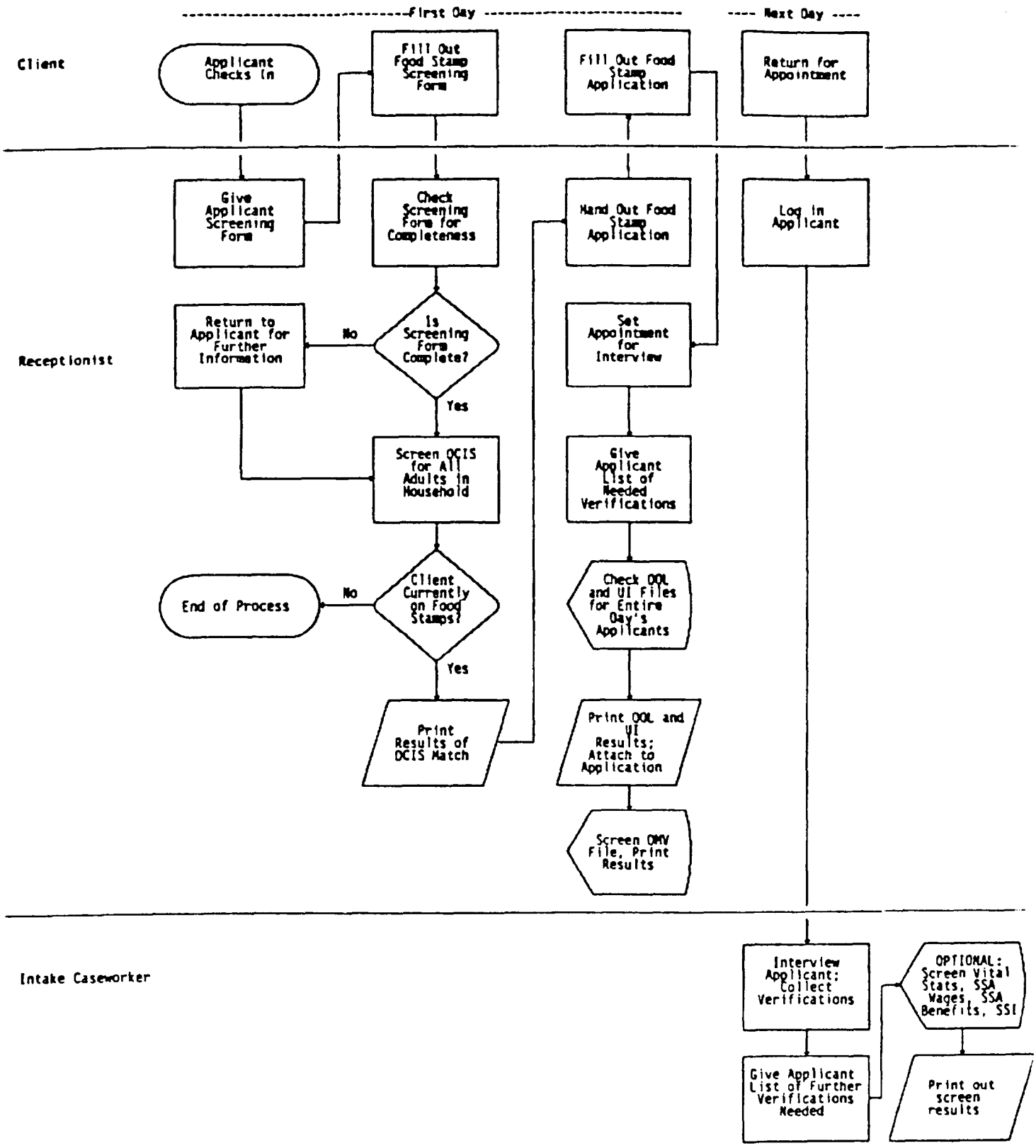

last month), and if they live with relatives 18 years old or over. Applicants are also asked to list the name, date of birth, SSN, gender, and race of all persons for whom they are applying for benefits.

Step 2: Verifications and Computer Matches. The receptionist screens DCIS for each name on the application form. In addition to attempting name matches, the receptionist can also try truncated first names, alternative last names (e.g., Smyth for Smith), and "sound alike" inquiries to make sure that any existing record is located. If a match is found, the receptionist will enter his/her Master Client Index (MCI) number in the appropriate space on the screening form. From this DCIS screen, the receptionist can ascertain if, and when, an applicant was part of a public assistance, Food Stamp or Medicaid case, whether or not the case is still open, and, if the case was closed, when and for what reason.

This computer-matching activity has several purposes. When an existing record is found on the computer, the resulting DCIS case number enables staff to locate case files because these numbers are the basis of the case filing system. Existing DCIS numbers are assigned to new cases in order to maintain a system of unique records.

A second purpose is to ensure against duplicate participation in public assistance programs. DCIS indicates if applicants are currently participating in an assistance program in any Delaware county. If they are, they are informed that their cases must be either transferred to Kent County (as with AFDC) or closed in the other county and re-opened in Kent County (as with food stamps). This procedure together with internal system edits ensures that an individuals can not be active two cases in the same assistance program at the same time.

Finally, the printouts from the DCIS system provide up-to-date information on any payments the applicant may be receiving from assistance programs, on household members in current or previous cases, and on various aspects of the applicant's financial situation. All of this information may be pertinent to the applicant's new request for assistance.

Table of Contents

The receptionist prints information from DCIS on the local office printer and attaches the hardcopy to the screening form. If the applicant is applying for food stamps and the DCIS screen does not indicate that there is an active food stamp case already in the system, the receptionist will hand him/her a DES Application Form. Delaware uses an integrated application form for food stamps, cash assistance, and medical assistance. The application is 24 pages long but not all sections are completed by food stamp only applicants. When the applicant returns the form, the receptionist reviews it for completeness and schedules an interview appointment, typically for the next day. Interview appointments are scheduled between 8am and 4pm. If a person is applying for expedited services, he/she may be interviewed that same day. The applicant is also given a list of general verifications that must be submitted at the time of the interview (rent receipts, pay stubs, and the like).

Screening of Department of Labor (DOL) records of employer-reported wages and Unemployment Insurance (UI) benefits is conducted in the afternoon, after all new applications have been received. To access the DOL file, the screener must log off the DCIS database. Because the log-off and log-on procedures can be time-consuming, the DOL screens are done online for the entire "batch" of new applications received that day. The Social Security Number (SSN) and/or name of every applicant 16 years and older is screened in the DOL system. When the DOL file has been screened, the receptionist puts a check mark in the appropriate column next to each individual's name on the screening form. Wage or UI information is printed and attached to the DES screening form.

At this point, the procedures at JWSSC and MSSC vary somewhat. At the MSSC, the Department of Motor Vehicle (DMV) database is screened prior to all scheduled interviews. Typically, the screen is performed the same day the application is received. At the JWSSC, intake workers <u>may</u> screen DMV records. One worker noted that she screens DMV for any applicant not listing a vehicle and for applicants she suspects may be lying about what they reported.

Table of Contents

The DMV database does not contain information on an individual's SSN; screens are performed on a name basis only. DMV produces only a last name and first initial, address, type of vehicle registered, and date of expiration of the registration. Consequently, it is not always evident whether or not any of the names produced by the DMV match the applicant. The screener must review the list of all persons with the same name and try to decide which one of these person is the applicant. DMV screens are printed whenever a match occurs.

There are other optional matching activities, conducted at the discretion of intake workers. Databases which might be screened include Delaware Vital Statistics, BENDEX, and SDX (done for elderly applicants only). Because of the relatively high population of migrant farm workers in Kent county, vital statistics data have limited utility in the county. While not available on DCIS, intake workers also have access to Child Support Enforcement records through telephone contact with the administering office. (On-line as of 8/87).

Finally, existing case records are obtained prior to the client interview. If the prior case was handled at the Kent County offices, the case file is retrieved from storage. If the case was located in another county office, the case file is transferred to Kent County.

Step 3: Intake Interview. The next step for the applicant at both offices is an interview with the food stamp intake worker, at which point the application form is reviewed. The intake worker may query the applicant about information obtained through the DOL wage or UI matches if it does not agree with information provided on the application itself. Copies are made of all of the pertinent verifications submitted by the applicant. The applicant may be requested to provide additional verifications which can either be mailed to, or dropped off at, the office. Generally, the applicant does not return for a second interview.

Table of Contents

Step 4: Followup and Eligibility Determination. After the interview, the data entry clerk enters pertinent information from the application into DCIS (name, date of birth, SSN, and soon). Entering applicant data into the DCIS system also prevents the individual from submitting another application at a different office while certification is pending. If an applicant were to go to another food stamp office in the State, the pending application would be uncovered during the initial DCIS screening.

These data are incorporated into the DCIS system overnight and are summarized on a "turnaround document (TD)" which is returned to individual caseworkers for review. TDs are printed daily at the central Biggs Data Center in New Castle and delivered by automobile courier to each of the State's county welfare offices the next day. The caseworkers manually correct or update TDs and return them to data entry clerks for key-entry into DCIS.

After client data are complete and verified, this information is used to determine applicant eligibility for benefits and, if eligible, the grant amounts. The system automatically calculates benefits, however, some caseworkers still routinely complete manual calculations. The system uses the most current information about each recipient. For example, if AFDC or SSI income has been changed since the time of application, current data are used to compute actual benefits.

Although Delaware's automated system could generate notices to clients (or letters to third parties) to request additional documentation as part of the eligibility determination process, this procedure is not currently operational. Discrepancies are generally resolved with each applicant by issuing a "speed-memo" requesting additional documentation; third-party contacts (particularly with employers) are rarely done. The burden of proof is placed on the applicant in almost all cases.

Table of Contents

THE EFFICACY OF THE APPLICANT-MATCHING SYSTEM IN DELAWARE

This section explores the effectiveness of applicant matching in Delaware. First, results from the quantitative cost-benefit part of the study that are particular to Delaware are summarized. Then, the qualitative perceptions of local and State staff on the utility of applicant matching are explored, including effects on error rates and deterrence effects.

MEASURABLE COSTS AND BENEFITS OF APPLICANT MATCHING

The costs of applicant matching include staff time to both screen cases and followup on whatever discrepant information is discovered through the applicant matching process, as well as charges associated with using the computerized data bases. The staff time spent on screening was measured through time motion studies conducted on-site, while followup time was measured through worker time logs associated with each case.

The benefits of applicant matching include reductions in benefit payments based on information obtained from matching, as well as denials of benefits to clients who would have been certified in the absence of matching information. These benefits were measured by abstracting information from a sample of cases (264 that went through to final certification or denial) on (1) what the applicant originally reported their household situation to be; (2) what household situation the final benefit determination was based on; and (3) whether any of the changes in the client's household situation, between that originally reported by the applicant and that used in final benefit determination, were attributable to computer matching. Changes attributable to applicant matching were translated into changes in food stamp, AFDC and Medicaid benefits, and projected over the period of time during which the applicant would have been receiving the overpayments in the absence of the matching information.

Information Obtained from Applicant Matching. Information obtained from applicant matching in Delaware included data on the applicant's current and prior receipt of public assistance benefits, recent wage history, receipt of unemployment benefits, data on receipt of Social Security benefits (both

SSI and regular Title II benefits) and ownership of motor vehicles. However, the extent to which these databases were accessed varied widely. Some of the databases were routinely used, such as the benefit history records (over 90 percent of the time) and the wage and UI information (about 70 percent of the time). With others, the access was more episodic, being essentially up to the discretion of the caseworker. Motor vehicle information was obtained for about 28 percent of the cases, while Social Security benefit information (both SSI and regular Title II) was obtained less than 20 percent of the time.

Data sources also varied widely in how often accessing the source actually produced information on the applicant -- that is, produced a "hit". The highest level of hits was recorded checking benefit history records, where about 80 percent of attempts produced information about the applicant. The next highest was regular Social Security benefits, where 62 percent of attempts produced at least some information. This was followed by SSI benefits, where 42 percent of inquiries produced hits, and motor vehicles, at 40 percent. Interestingly, the lowest levels of hits were recorded for the databases maintained by DOL -- wages and unemployment benefits. For each of these, only about 16 percent of inquiries produced information on an individual applicant.

Even where matches were obtained, these hits did not often uncover discrepancies in the applicant-reported information. The proportion of hits that uncovered discrepancies was always under 10 percent, and, in some cases, zero. For example, the two highest levels of discrepancy hits were recorded for wage records (just under 10 percent) and SSI benefits (7 percent), while the levels of discrepancy hits on benefit history records, unemployment benefit records and motor vehicle records were close to zero.

Costs of Applicant Matching. The costs incurred obtaining the matching information described above were very low. Total costs for matching the 264 completed cases were only $447, or on average less than two dollars a case. Of this total, over half was accounted for by the costs of accessing the computerized databases -- roughly about 26 cents to screen an individual against a single database. The other

Table of Contents

part of the cost was attributable to the staff time involved in screening the cases and following up on the match results.

One important reason why the staff time costs were so low is that screening the cases -- that is, performing the actual match on a computer terminal -- is not a very time-consuming process. For example, the benefit history screening, which is the most commonly performed screening, took less than three minutes per case, on the average, while the DOL screening (wages and unemployment benefits), the second most commonly performed screening, took only a little over a minute. These times translated into costs per screening of 54 cents for the benefit history records and just 21 cents for the DOL records.

Similarly, following up on match results did not consume a great deal of staff time, either. This was because so many cases involved little or no followup time. Of course, where a match did not produce a hit, there was no followup time involved at all. And, even where was a hit, if the match results simply corroborated the applicant-supplied information, the amount of time spent following up was very small.

Benefits of Applicant Matching. Benefits from applicant matching can occur where benefit levels are affected by the results obtained from computer matching, or where denials could be attributed to these results. In Delaware, there were only 6 instances (out of a total of 264 cases) where benefits were affected by discrepancies uncovered through applicant matching, and one of these was a denial.

This produced a modest total benefit savings of $3,540.77. Of this total, the largest proportion was due to matching on the wage database. Total savings from this one database alone exceeded $3,000, or almost 85 percent of the total amount. The next largest savings amount was from screening the case history files, totaling slightly over $500. Finally, matching on some databases produced extremely small savings or none at all. Matching on regular Social Security benefits only saved about $30 while matching on both unemployment benefits and motor vehicles saved nothing at all.

Table of Contents

Relationship of Benefits to Costs. Overall, the benefits of applicant matching in Delaware while modest, substantially outweighed the costs. The ratio of benefits to costs was 7.4 to 1 and the net savings (savings minus costs) was $3,065.00.

Easily the most effective database, from the standpoint of net savings (i.e., savings less cost), was that for employer-reported wages. Matching on wages generated a net savings of about $2,950, a figure equal to almost 98 percent of total net savings. This was followed by matching on the case history database, which netted about $350 and matching on regular Social Security benefits where savings after costs were about $19.

Matching on a number of databases actually lost money. This was true of matching on SSI benefits and unemployment benefits, where a net loss of about $70 was realized in each case, and matching on motor vehicle records which lost about $40. The reason for these losses is simple: the costs of the matching, while very low, were still tangible and different from zero, while the benefits of matching for these databases were basically non-existent.

In general, though, applicant matching in Delaware appears to be cost-effective. This cost-effectiveness is remarkable in light of how few errors seem to be uncovered through applicant matching. However, even a small number of applicant errors, when translated into a monthly benefit savings, and projected out over a number of months, appear to be more than adequate to outweigh the very low costs, and produce a favorable benefit-cost ratio.

STAFF PERCEPTIONS OF APPLICANT MATCHING EFFECTIVENESS

Effect on Payment Error Rates. For the most part, staff believe that applicant matching has had only a modest effect on reducing payment errors. To some extent this is due to Delaware's already low error rate (which has dropped from 3.7 to 3.0 percent). They did not believe that a causal connection can reasonably be made between applicant matching and the decline in the error rate. While applicant matching may have made a contribution in this direction, a number of other factors are cited as being of greater importance.

Table of Contents

First, the automation of food stamp case management through DCIS is viewed as making a large contribution in this direction. This allowed a number of repetitive or mathematical functions to be handled automatically that had previously been done manually and subject to much error, including client budgeting, eligibility calculations, and benefit determination. By all accounts, DCIS has proved a big success in performing each of these functions, so its contribution to bringing down the error rate may have been considerable.

Second, the introduction of shorter recertification periods is viewed as having had an important effect on error rates. Recertifying clients at shorter intervals, with the increased opportunity for interviewing the client and thoroughly verifying their household situation, allows for the detection of errors that may have gone uncovered in a longer recertification period.

Third, the Kent County has made a concerted effort to improve client interviewing procedures. Therefore, at the same time that computer matching has been increasing, other types of client verification have been improving as well.

Table of Contents

Although neither county or State staff have direct evidence to support their views, they all believe that the applicant-matching system has had an important deterrence effect that goes beyond even the narrow range of data directly collected through applicant matching. In particular, two reasons for the deterrence effect were cited:

- The presence of a computer terminal during the application interview by itself may lead clients to conclude that the eligibility worker can verify information being supplied by the applicant.

- When applicants are occasionally confronted by the eligibility worker with accurate information that the applicant did not supply (for example, the identity of former employers), it is thought that applicants believe that the eligibility workers have access to a broad range of information that would undermine any attempt to misreport.

One way in which local staff reported that clients have found to circumvent the system is to provide employers with the Social Security number of one of their children. But, because children and adults are screened through DCIS and DOL this device can be prevented.

Effects on Case Processing. Both supervisory and intake staff claimed that the applicant-matching system has improved the accuracy and timeliness of casework. Before the installation of the current online system, caseworkers could obtain information on clients from hardcopy records but this was a difficult procedure (especially for cases transferring from other offices) and generally one not good for preventing the provision of duplicate benefits to households (they had to use a physical master file of index cards). The DCIS system files are readily accessed and organized by individual, making identification much easier. In addition, the DCIS system's capacity to retrieve hard copy of automated files on any case from any county in the State makes potentially valuable information available to the intake workers at the very beginning of the application process even if paper records are not available.

Table of Contents

Simiarly, the online DOL and DMV match at application allows the eligibility worker quicker access to important case information. While the monthly IEVS-DOL match of newly certified recipients could make the same information available, it would, in most instances, be available to the caseworker only after the eligibility determination had been made. Prior to DCIS, caseworkers only occasionally contacted DOL and DMV; now they can do this regularly.

Another efficiency afforded by the DCIS system is its ability to perform automated and integrated eligibility determination online. Given raw data about household income, resources, composition, and other eligibility factors, the DCIS system automatically generates eligibility and grant decisions for both the Food Stamp and AFDC programs; this makes it easier for workers to administer both food stamp and AFDC cases. In addition to the benefits of the applicant-matching system for casework, the system also helps supervisors and county office managers. Since supervisors must review each application prior to eligibility determination, the system allows access to information useful for supervisory review.

Finally, DCIS has significantly reduced the amount of paperwork required to process applications thereby allowing intake workers to spend more time pursuing other verification sources (e.g., DMV) and spending more time on client interviews. The current system is, however, somewhat cumbersome due to its dependence on the use of the turnaround document. Instead of online data entry and editing by intake workers, information is entered by special data entry workers and returned to caseworkers in hardcopy form for review and update.

Table of Contents

APPENDIX E

THE USE OF COMPUTER-ASSISTED VERIFICATIONS OF APPLICANT-REPORTED INFORMATION IN DEKALB COUNTY, GEORGIA

For further information contact:

Department of Human Resources
Division of Family and Children Services
Management Information Systems
878 Peachtree Street
Atlanta, GA 30309

Table of Contents

ACKNOWLEDGEMENTS

This case study of applicant matching in Georgia was made possible through the kind assistance of many people. The author, Michael Puma, gratefully acknowledges the help of: Margot Cella, who accompanied me on the site visit; Sally Conavay, Donald Forbes, Peggy Gibby, Shirley Jernigan, Kathleen Marsh, Jamie O'Neil, Roger Smith, and many others, who give freely of their time during our site visit to Georgia; the many eligibility workers in the Warren Street and Court Square offices who helped us to measure the costs of conducting applicant matching; and Celia Bryan who abstracted data from the applicant case records. I would also like to thank Melody Bacha (the Project Officer), John Hitchcock, Edward Speshock and Jill Herndon of the Food and Nutrition Service who provided useful comments and suggestions throughout the course of this project. Finally, the report was produced by Marsha Strother.

Table of Contents

APPLICANT MATCHING IN GEORGIA

This study of applicant matching is based on three types of information: interviews with State officials and local staff from DeKalb County welfare offices (conducted during a five day site visit during July 1987); data abstracted from the application records of all individuals applying for food stamps in DeKalb County during a period of three weeks; and worker time logs and time motion studies.

SUMMARY

Operational Description. DeKalb County residents may apply for food stamp benefits every weekday. Receptionists conduct preliminary verbal screening during which they obtain applicant Social Security numbers, and distribute applications. While clients complete application forms, a receptionist performs an initial computer screening on PARIS, Georgia's automated case management database. This initial match is conducted to locate existing client records and case numbers and to prevent duplicate participation in public assistance programs.

This information is combined with completed application forms, then receptionists continue PARIS screening for all household members (including children). This matching activity provides information on current or prior (past 36 months) benefits history for food stamps, AFDC, and Medicaid. About 60 percent of all inquiries produce matches. Information is printed and attached to each application.

These materials form the case record. (Previous case files are also incorporated into new case records.) Because clients are seen on a first-come-first-served basis, arrival time are noted on record packages which are placed in a filing rack. Intake workers pick up these packages and conduct several other applicant matches. Using the Information Clearinghouse (being pilot-tested in DeKalb County), workers check wage and Unemployment Insurance (UI) benefit records. About three-quarters of the wage inquiries produce matches, while about one-third of the UI attempts result in matches. Hard copies are printed of all match attempts and placed in record packages.

Table of Contents

At one DeKalb County office, intake workers conduct brief screening interviews with applicants to determine the programs for which each client is applying; to inform applicants about other programs; and to inform each applicant of needed verifications. At this office, intake interviews are scheduled within 7 to 14 days.

At another DeKalb County office, intake interviews occur the same day that clients complete their application forms.

During intake interviews (at both offices), workers complete Food Stamp Applications interview Guides, obtaining detailed information on unearned income, resources, and shelter and medical expenses. Discrepancies between client-provided information and data from the automated systems are discussed. Interviewers provided lists of needed verifications to each applicant. The burden of proof for resolving discrepancies falls on the individual applicant.

Intake workers transcribe information from interview guides onto data entry forms which are used by computer operators to enter applications onto PARIS. The data entry operators officially screen all case members and assign client identification numbers. Data are processed overnight at the State's central computer center, and intake workers receive reports the next work day. Local staff consider PARIS to be cumbersome because of the amount of paper generated by the system; a separate turnaround document is produced for each change. Because of this system awkwardness, workers tend to retain data entry forms while waiting for verifications to be submitted. This delay limits the system's ability to identify and prevent duplicate applications.

Several other sources are available for computer matching including a highly confidential Birth Records Index File and DeKalb County data including Child Support Enforcement records, voter registration records, Department of Motor Vehicle records, traffic court records, and property records. County records are rarely checked.

Incidence of Detected Discrepancies. Of the 204 applications in the DeKalb County sample, information which affected benefits was uncovered through computer matching in only

three cases. No cases were denied using data obtained through applicant matching.

Costs of Applicant Matching. The costs of applicant matching include staff labor for screening cases and following up on discrepant information. They also include computer costs. Total costs for applicant matching for the 204 completed applications in DeKalb County were $832, or about $4.00 per case.

Labor costs for computer matching are low because the time needed to screen applications is minimal, averaging less than a minute per attempt. Also, very few discrepancies are identified, and the burden of proof for resolving these problems is placed on the individual applicant.

Savings from Applicant Matching. The three cases in which discrepancies were identified resulted in total savings of $603 in reduced food stamp benefits. Over 90 percent of these savings stemmed from matching on the UI database.

For each dollar spent on applicant matching about $0.72 was saved. Thus, in Georgia, applicant matching does not appear to be cost-effective in strict quantitative terms. However, at least two factors may have caused this to occur:

- The figures shown are estimates and, therefore, subject to some uncertainty. We took a snapshot of applicant matching at each site and based our results on the number of applications found in error during that short period of time. If we were to go back at a different time we would, in all likelihood, find a different number of errors at each of our nine sites.

- The estimates exclude possible deterrence effects. To the extent that such effects are large, excluding them will underestimate the savings from applicant matching. This can be of particular importance for those sites where the likelihood of deterring misreporting is greatest. In particular, DeKalb County was found to have large numbers of voluntary withdrawals. As a result, they may be deterring at least some applicants from applying for benefits because of the possibility of

Table of Contents

having their information computer verified. If these potentially misreporting individuals had submitted an application, the number of detected errors and the associated savings may have been higher.

Other Benefits from Applicant Matching. State and local staff believe that preventing clients from obtaining duplicate benefits is a major achievement of PARIS. Also, automating food stamp case management has removed repetitive and mathematical functions as worker responsibilities and has greatly decreased errors in benefit calculations.

Local staff consider the Information Clearinghouse to have had a major effect on reducing payment error rates because applicant-reported information can be checked against wage and unemployment benefits files. Staff further believe that the knowledge that these checks are made and the presence of computer terminals encourage applicants to report accurately.

Finally, an evaluation of the first few months of Clearinghouse implementation indicates that, during that time, applications were processed much more quickly in DeKalb County. The increased efficiency is attributed to automated system capability to immediately confirm/verify client-provided information.

ORGANIZATION OF CASE STUDY

This case study is divided into three parts: a discussion of aspects of applicant matching that are common throughout the State of Georgia including the management and characteristics of the Food Stamp Program, the development of computer matching, a description of the databases and computer system used, and future development plans; a description of those aspects of applicant matching that are specific to DeKalb County (the subject of our site visit) including the organization and characteristics of the County Food Stamp Program, application and verification procedures, and county-level databases and computer systems; and, a discussion of the costs and benefits of applicant matching as measured in DeKalb County.

STATE DESCRIPTION

THE FOOD STAMP PROGRAM IN GEORGIA

Food Stamp Program Administration and Organization. The Department of Human Resources (DHR) administers Georgia's social service and income maintenance programs. Within DHR, the Division of Family and Children Services (DFCS), manages the State's income maintenance programs, which include Food Stamps, AFDC, Refugee Assistance, and Energy Assistance. The State does not operate a general assistance program for needy adults nor does it offer the unemployed parent option of AFDC (AFDC-UP). Within DFCS, the Management Information Systems (MIS) Section operates an automated case management system (PARIS) and provides the links to other databases used to verify client-reported information.

The Georgia Food Stamp Program is State-supervised but is administered by the counties. There are 159 counties in the State that are divided into nine regions. In addition, each of Georgia's urban counties serves as its own region, for a total of 18 regions.

Caseload Characteristics. In an average month, Georgia issues about $21,400,825 in food stamp benefits to 190,000 households (a total of about 531,000 recipients) and about $20,069,852 in AFDC benefits to 83,000 households (about 236,000 recipients). Approximately 23 percent of the food stamp cases also receive cash assistance.

Food Stamp Payment Error Rates. Georgia has experienced high error rates for a number of years. Since 1980, the State payment error rate has ranged from a low of 6.5 (in the latter half of fiscal year 1983) to a high of 13.4 percent in fiscal year 1986. In 1985, when the error rate was at 12.9 percent, unreported or underreported earned income in the form of wages and salaries accounted for the greatest proportion of errors in the Food Stamp Program -- 54.4 percent of the federally sanctionable error rates. This type of error also contributed significantly to AFDC errors (an estimated 31.9 percent). Earned income errors for Medicaid recipients comprise only 6.5 percent of the sanctionable errors. For the past three years the State has faced the threat of a substantial liability for these high error rates. If sanctioned, the State could lose an estimated

Table of Contents

$16.5 and $20.8 million for the Food Stamp Program in 1985 and 1986, respectively. These figures represent a total loss to DFCS of $37.3 million for the Food Stamp Program alone.

SYSTEM DEVELOPMENT

Creation of the Automated Case Management System. Georgia was one of the first States to develop and implement an automated case management system for use with public assistance programs. Their initiation of the Public Assistance Reporting and Information System (PARIS) preceded both the IEVS and FAMIS regulations. (In fact, the original PARIS design served as a model for the creation of the FAMIS regulations.) Consequently, Georgia did not have the benefit of other States' experience when they began this project; they were largely in unchartered waters.

The impetus for the development of PARIS was the need to deal with the multiple problems of increasing public assistance caseloads, rising welfare costs, rapidly changing program policies and regulations, and insufficient numbers of staff. A simple punch card system was already in place in 1975 for the issuance of benefits. However, the complex tasks of budgeting and eligibility determination were performed by county caseworkers. By automating these tasks, Georgia hoped to improve the efficiency of program administration and reduce the incidence of agency-caused payment errors.

The development of PARIS began in early 1975 with a system needs analysis carried out by staff from the Department of Human Resources (DHR). This analysis produced an Advance Planning Document (APD) which was subsequently submitted to, and approved by, the federal Department of Health, Education, and Welfare (now the Department of Health and Human Services-DHHS) and the Food and Nutrition Service (FNS), USDA. Following approval of the APD, a Request for Proposal (RFP), seeking a contractor to complete a general systems design, was developed and released in February 1976 to 26 potential bidders. Boeing Computer Services was eventually selected as the contractor. However, Georgia encountered problems obtaining contract approval from DHEW. Two objections were raised: the proposed cost of the contract was viewed to be too low for the level of effort required; and, the initial design proposed by Georgia involved only a partial automation

of case processing functions. Some activities would have remained under a separate manual system.

Because of DHEW disapproval of the initial contract with Boeing Computer Services, Georgia had to re-issue in October 1976 the RFP for the general systems design phase of PARIS. A contract for $580,000 was awarded in early 1977 to Arthur Young and Consultec (a subcontractor). The general systems design was completed in 1978 when a second RFP was prepared to develop a detailed systems design. This RFP was issued in October 1978, with a contract being awarded to Consultec (the subcontractor on the earlier study) in the early part of 1979. Final approval was received from DHEW and FNS in the Summer of 1979.

Work on the system's design continued through 1981 with an April pilot test in Cobb County. In September 1981, another RFP was issued for the purchase of the computer equipment needed to implement PARIS across the State. The selected contractor was IBM.

By May 1982, FAMIS approval was received and Georgia began statewide implementation. The initial step was activating eight additional counties on the following schedule: April 1982 -- Paulding County; May 1982 -- Stephens, Spalding and McDuffie Counties; June 1982 -- Clayton, Lowndes and Taylor Counties; and July 1982 -- Douglas County. Training, like this initial implementation, occurred on a node-by-node basis. (An explanation of Georgia's system nodes appears in the discussion of system hardware.) Staff from the MIS section of DFCS, who were initially trained by the contractor, trained local office personnel. Training lasted six days at each node. When training was finished at a node, local caseworkers began converting cases to PARIS format while the trainers moved on to the next node.

After the successful implementation of PARIS in one county for each of the nine system nodes, Georgia decided to implement PARIS statewide for initial applications only rather than to phase-in the system. This unified implementation process began in September 1982. However, the effort was much larger than anticipated, and the system was overwhelmed by the number of transactions. On October 25,

Table of Contents

1982, the addition of new cases to PARIS was suspended because DOAS recabled the computer center incorrectly when installing a new mainframe. Cases already on the system, however, continued to receive benefits through PARIS. During the pause in implementation, a major change in how print was transmitted was written by the contractor (Consultec). Consequently, implementation was not resumed until December 1982, but counties were phased-in this time on a district-by-district basis. This process continued through April 1984 when Fulton County (the largest county in the State) completed conversion of all cases and was fully operational on PARIS.

Development of Computer Matching. With the implementation of PARIS, Georgia gained the capability to provide local offices with online access to case records of public assistance recipients. The availability of a computer network also allowed the State to seriously consider creating an integrated system to verify applicant-reported information.

Consequently, in mid-1985, Dekalb County was selected by DFCS as a pilot test site for an Information Clearinghouse. The driving force behind Clearinghouse development was a concern over unacceptably high payment error rates. In particular, misreported earnings and resources were believed to account for a major proportion of such errors. Because other State agencies, such as the Department of Labor (DOL), possessed information which was already being screened either manually or through lengthy batch processing procedures, DFCS proposed to automate this information and to make it easily available to caseworkers during the application process.

During planning for the Clearinghouse pilot project, DFCS decided to substitute microcomputers for the dumb terminals. DFCS determined that it would be cost effective to purchase IBM-XT personal computers rather than terminals and caseworkers could use these machines for a variety of other applications such as client budgeting, interview scheduling, and the like. Consequently, 28 microcomputers were located throughout the county's three offices: eleven at the central DeKalb office; fourteen at the Warren Street office; and three at the East Lake Meadows housing project. This allocation provided approximately one computer for every four caseworkers.

Most of the hardware was delivered to the three DeKalb offices by the end of October 1985. However, the system did not become fully operational until March 1986 because of difficulties with installing the computer hardware and establishing the necessary telecommunications links. Until the pilot was proved successful, it was not practical to provide the mainframe-to-mainframe link necessary to provide access thru PARIS. Because such a link was extremely important to caseworkers, the Department of Administrative Services (DOAS), activated additional ports on the existing PARIS controllers and connected coaxial cables to each microcomputer. Using a simple, two-position, coaxial switch box, a caseworker can access either PARIS or DOL simply by throwing a switch.

Prior to the pilot test, caseworkers had access to PARIS information at only one or two terminals in each office. The remainder of the terminals were used full-time by data entry operators to input client information. The addition of the microcomputers not only provided direct access to DOL for checking client-reported wage and UI data, but also expanded caseworker access to PARIS. Easier access resulted in more caseworker checking of client information during the application process.

On-line access was also provided to county data that had been available to caseworkers for ten years: property tax records; voter registration records; police citations and court proceedings. To provide access to these databases, DeKalb County purchased bisynchronous, terminal emulation components to communicate with the DeKalb County Data Center via a separate telephone line connected to three of the microcomputers.

An outside consultant assisted with hardware installation and staff training. (Because the system involved only an inquiry function, staff training was much simpler than for PARIS.) The consultant further helped DeKalb County expand microcomputer use by assisting with the development of various software programs. For example, a decision-making routine has been developed to aid caseworkers making client eligibility determination for Medicaid-only recipients. The

program walks the worker through a series of questions about the client's circumstances. As the worker types in the answers, the program keeps track of all the information, and, at the end, suggests which of the several available programs is most applicable.

Problems Encountered. As with most complex systems, the development and implementation of PARIS and the Clearinghouse in Georgia has not been free of problems.

1. Changing Demands -- When work began on PARIS in 1975, there were no existing systems of similar size and complexity that could be used as models. Georgia had to learn by trial and error to design and implement a large integrated case management system. The changing nature of the demands placed on the system also raised complications.

    - The system was originally planned to contain case data and to compute eligibility and to issue benefits. Over time, Georgia has had to greatly modify the system to handle claims and collections, IEVS requirements, and employment and training programs.

    - When PARIS was designed, FNS required Georgia to maintain a "paper trail" for auditing purposes. Also, FNS would not allow eligibility workers to have access to client data. (This requirement was intended to separate the certification and benefit issuance functions.) Meeting this requirement resulted in a less efficient system which uses intermediate data entry workers and paper turnaround documents to create, edit, and update client records. The requirement was rescinded in 1984, and Georgia now plans to modify PARIS to allow eligibility workers to directly enter and edit client information.

    - Federal agencies issue new regulations that affect PARIS and do not allow adequate time to develop and test the software required to comply with such change. PARIS was originally designed with a great

deal of "hardcode" that makes it very difficult to modify.

Because PARIS was a seminal effort in the development of automated case management systems, was developed over the past decade, and has had to perform functions for which it was not originally designed, it is a patchwork of software programs. Not only is this less efficient than a system that is designed from the outset to meet current needs but the system is also now so complex that programmers cannot always predict the effects a particular change may have on the system. Often, they modify one part of the system and find that unexpected problems have developed elsewhere. DOAS maintains a separate "test system" to develop and refine new programs. When staff are satisfied that a new program functions properly on the test system, it is installed on the production system (usually on a Friday night to allow them the weekend in case something fails).

2. Organizational Effects -- At the State level, the increased use of automated systems has increased the size of the professional staff needed to update and maintain them. In addition, staff qualifications have changed as computer processing has shifted from batch to online networks requiring sophisticated telecommunications.

   Changes have also occurred for local office workers. The PARIS system requires them to be more precise. The need for accuracy and efficiency within the structure of the computer system has reduced individual worker discretion. As one person said, the activities of the caseworkers are "now designed to accommodate the computer system." Worker reaction to the Clearinghouse is, however, more positive. Because it is a simple screening function, the workers view it as a tool that helps them to do their jobs better. The Clearinghouse has improved morale unlike PARIS, which some feel has made their jobs less interesting by reducing opportunities for individual decisionmaking.

3. Telephone Lines -- Telecommunications within Georgia were complicated by the multiplicity of local and regional

telephone companies. With about 25 separate companies operating in the State, transmitting data from local offices to the regional nodes and then to the central host computer can involve linking three or four individual telephone systems. For each link, a separate negotiated agreement is required.

4. Use of Consultants -- PARIS was mostly designed and implemented by outside consultants. At the outset, this assistance was essential because the State did not have available qualified staff. The outside consultant also provided the project management skills and procedures needed for a project as large as PARIS. Again, the consultant mitigated pressures on State staff to perform these functions.

However, extensive use of a consultant limited participation of State and local personnel in the design and implementation of PARIS. The system is so large and so complex that it has been very difficult for State personnel to maintain and enhance when they were not initially involved in system design and implementation. For other States planning a similar development process, staff suggested establishing a planned schedule for phasing-out consultants and phasing-in State personnel, emphasizing that State staff must be thoroughly familiar with the system well before they assume operating responsibility.

Local office staff expressed a related concern that the development of PARIS did not adequately consider the needs of the end-users. One result was that startup encountered many difficulties which they believe could have been avoided. From their perspective, there was not "enough emphasis on finding ways to help workers do their jobs better"; technical considerations were the paramount concern.

5. Pilot Test -- PARIS was pilot tested in relatively small [illegible]

counties which did not provide an adequate test of all of the problems the State would later encounter. As noted earlier, when statewide implementation was attempted, Georgia had to cease implementation, revise the

Table of Contents

programming, and phase-in counties over a period of about 18 months. The pilot test simply did not permit an evaluation of the system as it would be expected to operate when fully implemented. The volume of transactions and the complexity of case processing were not adequately tested.

6. Duplicate Records -- There have been, and continues to be, problems associated with the update process to the applicant screening file. The system sometimes incorrectly identifies cases as already in the master case record. Rather than resolving the problem, workers for expediency have created new cases using "dummy" identifiers. This approach allows them to enter and certify the case. Over time, however, this procedure has resulted in a significant problem of duplicate case records for the same clients. DOAS is currently resolving this problem and expects to have it corrected soon.

Development Costs. The cost of developing PARIS from fiscal year 1976 through fiscal 1987 totaled $10,810,057. However, it is not possible to identify the cost of developing applicant matching *per se*; inquiry capability is an integral part of the system and development costs for such an integral system piece cannot be disaggregated. For the Clearinghouse pilot project in DeKalb County, the development costs are: equipment--$187,050; annual DOL access charges--$17,565 for the 1986 State fiscal year and, $20,480 for State fiscal 1987.

STATE DATA-BASES USED TO VERIFY APPLICANT-REPORTED INFORMATION

Public Assistance Benefit Records. PARIS incorporates two primary data sources: Georgia's public assistance benefit records and the State Department of Labor's wage and Unemployment Insurance (UI) database. These data are maintained on Georgia's central automated case management system (PARIS). This system maintains records for, and tracks timely actions on, applications for benefits and recertifications of eligibility for food stamps, AFDC, and Medicaid (MA); determines eligibility for benefits; calculates most and generates all benefits (except Medicaid cards which are issued by a separate system); generates client and case record eligibility notices; performs mass reviews; generates

Table of Contents

monthly report forms, tracks responses to those forms, and takes action when indicated; produces caseload and administrative management reports; reconciles food stamp benefits and interfaces with the Department's Benefits Accounting and Reporting System for the fiscal accounting of AFDC warrants; performs numerous other tasks to support the duties of caseworkers, supervisors, and local, district, and state administrative and management staff; and, calculates and tracks overissuances/overpayments via the Claims Management Component. In October 1986, an IEVS component was added to PARIS to perform required IEVS matches and track timely actions to resolve discrepant matches.

The PARIS system includes all currently active food stamp cases, as well as cases closed within the last three years. Each case record contains: casehead name, Social Security Number (SSN), date of birth, address, gender and race; case number; application and other pertinent dates for last active case; certification period and recertification date; number of household members; monthly food stamp allotment amount; history of food stamp benefit receipt; a variety of financial information derived from the client's last active case; and key information on other case members. The system also contains analogous information for AFDC and MA cases.

Screening applicants against this database of client records requires the client's Social Security Number (SSN), name, gender, and date of birth; if available, the individual's PARIS case or client ID number can also be used. If the SSN is provided, it is first used to search for a match. If a match is not found on SSN and a client ID number is provided, it is then used to attempt a match. If a match is not found by either SSN or client ID number, the system uses the client's name, gender and date of birth to generate three different Soundex keys (or levels). (The first key is the most specific, and the last key is most general.)

Case files are updated daily. During the day, case record changes are stored in regional minicomputers or "nodes." After local offices close, these updates are sent to the central (mainframe) computer where they are processed overnight. Updates based on these changes are sent back to the nodes and are available the next day to local welfare offices.

Table of Contents

DOL Wages and Unemployment Benefits. The Department of Labor maintains this database to administer the State Unemployment Insurance (UI) program. The system includes all persons

Federal government, the military, or certain small, private non-profit employers.

Wage data are based on reports from employers. Wage records for individuals include information for the previous five quarters and include: SSN; name; name and numeric identifier of each employer from which the individual received wages (employer addresses are in a closely linked separate file); total wages received by the individual in each of these five quarters; and, based on these wages, a variety of information related to the individual's potential UI benefits, including benefit year beginning date, dollar amount of potential UI benefits, and number of weeks for which individual would be eligible. The data are accessed by SSN; no other indentifier is used to search this file.

UI data are internal DOL records of transactions and information relevant to paying these benefits. UI records for individuals cover 13 months and include the following: name, address (in a closely related file), and SSN of individual; UI application date; maximum total and weekly amount for which individual is eligible; claim status; total UI benefits paid and number of checks issued in each of the last 13 months; and the check date and amount for each check issued during the last ten weeks.

As is standard with these two types of files, the currency of the two types of data varies considerably. The UI data are generally up to date with only occasional delays when the

Table of Contents

Active recipients of public assistance are matched against the wage and UI data on a quarterly basis.

FEDERAL DATA-BASES USED TO VERIFY APPLICANT-REPORTED INFORMATION

Applicants are not currently matched against any of the available Federal databases. Federal data sources which are used only for matches on public assistance recipients include: monthly matches against BENDEX, BEERS, SDX, and IRS matches; monthly matches to verify Social Security numbers. In all cases, timing of these matches is such that, even if applicants are included in the match, it is highly unlikely that match results will be returned in time to be used in the determination of benefits. In addition, case-workers tend to wait until shortly before benefits are determined to actually enter applicant data into the PARIS system, and applicants cannot be included in IEVS matches until they are in the system.

COMPUTER HARDWARE AND SOFTWARE

Central Computer. A central (or "host") IBM 3081 mainframe computer, maintained by the Department of Administrative Services (DOAS) in Atlanta, is used to suppport applicant matching activities, as well as all the other computerized activities related to the Georgia DFCS. Connected to the main computer are eight IBM 4361 minicomputers serving different regions in the State. For the most part, these "nodes" are located in State-operated hospitals; for example the node for DeKalb County is located at the Atlanta Regional Hospital. (Ten other counties are also processed at this site.) These regional minicomputers are used for daytime, interactive processing of data from local welfare offices.

Data from daytime processing are sent from the nodes to the central computer after 5:00 p.m., where, overnight, these materials are processed by the mainframe computer. In the morning, an update file is sent from the mainframe to each node and series as the basis for the next day's processing. Search inquiries on clients, on the other hand, are routed directly from the nodes to the mainframe computer, where the complete files reside. Replies are then sent from the mainframe back through the nodes to the local offices.

For inquiries about wages and UI benefits, a further step is involved because these data reside on DOL's own computer, an

Table of Contents

Amdahl mainframe (IBM 3033 equivalent). The Amdahl mainframe is linked to the central mainframe via a telecommunications link, so inquiries about wages/UI are passed to it from the central mainframe and then back, through the central mainframe, to the regional minicomputers and, finally, to the local offices. (When implemented statewide, access will be directly through PARIS).

The DOL computer system avoids some of the problems associated with overload by a "gate" that limits the number of available ports on the system at any given time. This slows down processing but reduces the outside load on the system. (The gate arrangement may or may not be continued as access to DOL data increases with previously described expansion of the Clearinghouse function of PARIS.)

Communications. An IBM Communications Controller manages the data flow among terminals, minicomputers, and the central processor via leased telephone lines. This system forms the link, by high speed modem, to remote site controllers which connect "dumb" IBM 3270 type terminals, in the case of DeKalb County, IBM-XTs emulating 3270s, on the desks of clerical and eligibility staff through coaxial cable. Microcomputers are supported by SNA/SDLC (Systems Network Architecture/Synchronous Data Link Control) attachment through 3270 controllers to the minicomputers. Local hard copies are provided by desktop impact printers of the IBM 3287 type, connected to the same 3270 controllers.

The current data communication monitor is IBM's Customer Information Control System (CICS/OS/VS) which supports the interface between the end-user and the teleprocessing method, Virtual Telecommunication Access Method (VTAM). VTAM provides a transparent network for the direct transmission of data between local office terminals and the central computer.

A problem which has been noted is that the line speed with which telecommunications are conducted is relatively slow, resulting in longer delays than people would like for processing and inquiries over the phone lines. The fact that the phone lines are leased from 25 different telephone companies throughout the State provides fertile ground for breakdowns and delays. This problem is further exacerbated

Table of Contents

in Georgia by the frequency and severity of thunderstorms which often lead to power outages.

Software and Operating System. The central mainframe computer has OS70 architecture and uses IBM's MVS/XA strategic virtual storage operating system, designed to perform system control programming in large online interactive computer networks. Programming is completely ANS COBOL (American National Standard Common Business Oriented Language). However, various other software languages or packages are also installed on the central mainframe and available to local offices.

Security. Access to PARIS is available only during normal business hours -- 9am to 5pm -- to prevent unauthorized access to the client records. Also, to the extent possible, PARIS computer hardware (terminals, printers) are located in separate areas apart from the bulk of office workforces in rooms with minimal numbers of doors/windows.

Terminal access is requested for each individual caseworker and assigned by a designated Security officer within DFCS MIS. A new request must be submitted when a worker is terminated, or changes jobs or offices.

Database access is further limited by safeguards built into PARIS that restrict access to each level of the system to authorized personnel only. IBM's Resources Access Control Facility (RACF) assigns a unique user identification (USERID) and a password that corresponds to an individual's job responsibilities. For example, certification staff can query the system for Case/Client Information; only data entry operators can access the input level of the system.

Access to DOL wage and UI records is also strictly regulated through the use of individual passwords as described above. Another DOL security provision is that all attempts to access wages/UI data for a given SSN are recorded in an internal log linked to that SSN so that unauthorized access can be checked, should any question of confidentially arise. Finally, the DOL computer tracks all improper use of their system -- that is, the system notes attempts to access data beyond the wages/UI data that DFCS workers have been

authorized to use. However, it is still the situation that Georgia has no direct control over which SSNs are looked at by which workers. If a worker has a password to log onto the DOL system, there is nothing to prevent him or her from looking at the records of as many neighbors or associates as desired. In the near future workers will be required to sign a document stating that such abuses will be grounds for dismissal.

FUTURE DEVELOPMENT PLANS

With regard to PARIS, Georgia is currently considering a number of improvements:

- Increasing worker access to the system by providing more terminals in local offices -- the intent is to eventually have one terminal for every two workers.

- Providing additional data sources for applicant screening purposes, including SDX, BENDEX, DMV, and State income tax records. The State also plans to explore the use of private data sources such as banks and credit bureaus.

- Moving to a "paperless" system by allowing intake and eligibility workers to key-enter client information onto PARIS. Georgia is in the process of converting to automated client interviews. That is, questions would be presented on a screen, and workers would query clients and directly enter responses. Online editing and eligibility determination could be done while the client was still in the office. A hardcopy could be printed and reviewed with each client before s/he leaves,; copy would be corrected, and missing information noted on the form.

For the most part, these changes are designed to assist local workers and to minimize opportunities for overpayment errors.

The primary system change in Georgia is statewide implementation of the Information Clearinghouse. Based on the success of the pilot test in DeKalb County, Georgia has moved to integrate both SDX and DOL interfaces with PARIS. Unlike the pilot test, workers will not have to log off PARIS to access

Table of Contents

DOL but will be able to obtain wage and UI information directly through the main PARIS menu. The SDX file will be created by batch processing tapes from the Social Security Administration (SSA). Data will be updated whenever the source files are updated. The DOL files will be accessed via a direct mainframe-to-mainframe link, but a "gate" will be created to control access to DOL and prevent system overload.

Access to the Clearinghouse will be ensured by providing one microcomputer (an IBM XT-286 with a 20 mb hard disk) and printer for every four eligibility workers and supervisors, This ratio was used in DeKalb County. The microcomputers will also contain programs to assist eligibility workers in correctly applying policy program policies to determine shelter and medical deductions, to apply utilities standards, and to determine household composition.

Although Georgia would prefer to immediately implement statewide expansion, resource constraints require implementation in stages. By November 1987, 79 counties (393 workstations) will be operational, with the remaining 79 counties being added at a later date. At this point, programming is complete; and equipment is being installed in local offices, and staff training has begun.

The estimated cost of programming the expanded system, operating it for the first 12 months, purchasing, installing, and maintaining computer equipment, and other related expenditures total $2,307,930 for 79 counties (393 workstations). As funds become available, adding the remaining counties (111 workstations) would cost an additional $524,373 in development costs and $21,557 in operational costs for the next federal fiscal year. The State has estimated that, if even a 15 percent reduction in sanctionable error rates is achieved during the 1988 federal fiscal year ($25.1 million in FY86 from Food Stamps, AFDC, and Medicaid), the system will have paid for itself.

Table of Contents

DESCRIPTION OF APPLICANT MATCHING IN DEKALB COUNTY

THE FOOD STAMP PROGRAM IN DEKALB COUNTY

DeKalb County, adjacent to Fulton County (Atlanta), is the subject of this case study. DeKalb County maintain an average food stamp caseload of 5,855 households per month and has an average AFDC caseload of 3,472 cases per month. The DeKalb County food stamp caseload is overwhelmingly NPA. Of the 5,855 cases per month about 4,050 are food stamp-only cases. This proportion reflects the generally higher income level of the County's welfare population. The County also handles a very high rate of applications for food stamp benefits -- close to 900 per month of which about 25 are expedited cases.

Food stamp case error rates in DeKalb County have decreased significantly between fiscal year 1985 and fiscal year 1986. For the year ending in September 1985, the DeKalb County error rate was estimated to be as high as 22.83 percent; by the following year, that number had been reduced to 9.54 percent. This change in error rates is attributed to the introduction of the Clearinghouse in March 1986. An assessment of the early months of the Clearinghouse system indicated that over one-quarter of all inquiries made to the system (both wage and UI files) turned up data different from the information reported by applicants.1/

Staffing and Organization. DeKalb County contains three local welfare offices: the Main Office, located at Court Square, the Warren Street Office, located in Decatur, and the East Lake Meadows Office, located in a housing project in south DeKalb County. The Main Office handles all AFDC intake and ongoing case management. (The only food stamp cases processed through this office are joint food stamp/AFDC

1/Bateman, Peter G. "An Assessment of the Information Clearinghouse Pilot Project in the DeKalb County Department of Family and Children Services," Innovative Solutions, Inc., Atlanta, Ga. June 4, 1986.

cases.) The Warren Street Office, on the other hand, services only food stamp clients and applicants. Persons wishing to apply for AFDC are referred to the Main Office. The East Lake Meadows Office is a satellite office which serves as a case management operation for food stamp-only cases for residents of the housing project. The Main Office and Warren Street Office, the two offices in which applicant matching was observed, process all food stamp applications and provide ongoing case management services for the majority of DeKalb's food stamp clients.

At the Warren Street Office, there are two intake units with seven positions in each unit. Because of a hiring freeze, these units are currently understaffed, having only four and five intake workers each. The hiring freeze was lifted in July 1987, and efforts were underway to hire a full complement of caseworkers. There are also separate intake units located in the Main Office to handle both AFDC and food stamp applications. However, if certified for both programs, clients are assigned caseworkers for each program. New applicants are assigned to intake units on a rotational basis.

Intake workers are assisted by four Intake Eligibility Investigators (IEIs). Applications deemed suspicious by intake workers are referred to the IEI unit for further investigation. IEI workers have ten calendar days in which to complete their investigations and report the results to intake workers. The IEI unit is located in the Warren Street office but serves both the Warren and Main Street offices.

Both offices employ receptionists and clerks who have casework responsibilities. Unit supervisors have overall responsibility for the integrity of the casework performed by their respective units. Although supervisors do not sign off on each case, they are supposed to review each application. A staff of nine full-time-equivalent data entry workers are responsible for entering information from both data entry guides and data correction forms.

Table of Contents

COUNTY DATA-BASES USED TO VERIFY APPLICANT-REPORTED INFORMATION

DeKalb County has a number of county-level databases available for applicant matching including: child support; votor registration; motor vehicles (on microfiche); traffic court records; and property records. Child support records are accessed through PARIS while the other records are accessed accessed through a dedicated computer terminal. Key aspects of these databases are noted below.

Child support records include only cases where child support payments are under recovery. This database is accessed by name and can be used to verify amounts of any support payments and information on absent parents.

Voter registration records contain, among other things, SSNs and addresses of registered voters. Accessed by name, a voter registration file can verify applicant-reported residences. Staff feel that these data are of little value because of inaccuracies, so this match is rarely done.

The State Department of Motor Vehicles (DMV) provides microfiche to the welfare office on a quarterly basis. These data can be accessed by name or tag number (two separate files) and are used to check unreported vehicle assets. Because these data are difficult to use, they are reviewed only if the worker suspects that an automobile has been unreported. (For example, the applicant claims to be employed but reports no car.)

Traffic court records include names, addresses, and currently issued tickets. Accessed by name, these data can be used to check applicant addresses. Of course, this database can provide information only on those individuals who have been involved in recent traffic court proceedings.

Property records cover all property owned within DeKalb county. These data may be accessed by property address (which can be used to obtain the name of the property's owner) or by owner's name, which will yield a listing of all property owned by that individual throughout the county. Data are infrequently updated and are typically out-of-date because of delays in recording property transfers. As with DMV records, these data are checked only if the intake worker suspects the client is withholding information.

Table of Contents

COUNTY HARDWARE AND SOFTWARE

As previously described, access to PARIS and the Information Clearinghouse is through IBM-XT personal computers. Workers access county-level databases by means of three of these micorcomputers that are linked to the DeKalb County Data Center.

APPLICATION AND VERIFICATION PROCEDURES

The Main Office and the Warren Street Office process food stamp applications somewhat differently. The Main Office includes an initial screening interview, Warren Street does not. Steps for application processing include:

- Step 1 -- Initial intake,
- Step 2A -- Applicant matching,
- Step 2B -- Screening interview (Main Office only),
- Step 3 -- Intake interview, and
- Step 4 -- Followup and benefit determination.

Exhibits 1 and 2 illustrate the application processes in the Warren Street and Main Offices, respectively.

Step 1: Initial Intake. Monday through Friday at both the Main and Warren Street Offices, client intake begins at 8am. Clients are seen on a first-come-first-served basis unless they have previously scheduled appointments with caseworkers. When applicants enter either office, they are first directed to a receptionist. If they wish to apply for assistance, the receptionist asks them two questions: "Do you live in DeKalb County?" and "Do you or does anyone in your household currently receive AFDC?" The receptionist then obtains the individual's Social Security number (SSN) and jots the SSN on an Application Registration and Screening Form (Form 299). The applicant is then given three forms to complete: the Food Stamp Request Form (DeKalb County Form 112-FS), an application for Food Stamps (DHR Form 296), and an addendum which is a disclaimer for computer matching.

While the client is completing these forms, the receptionist performs an "initial" screening on PARIS using the information on the Form 299. This match is used only to locate existing client records for use during the eligibility

Table of Contents

EXHIBIT 1: FOOD STAMP APPLICATION PROCESS: WARREN STREET OFF

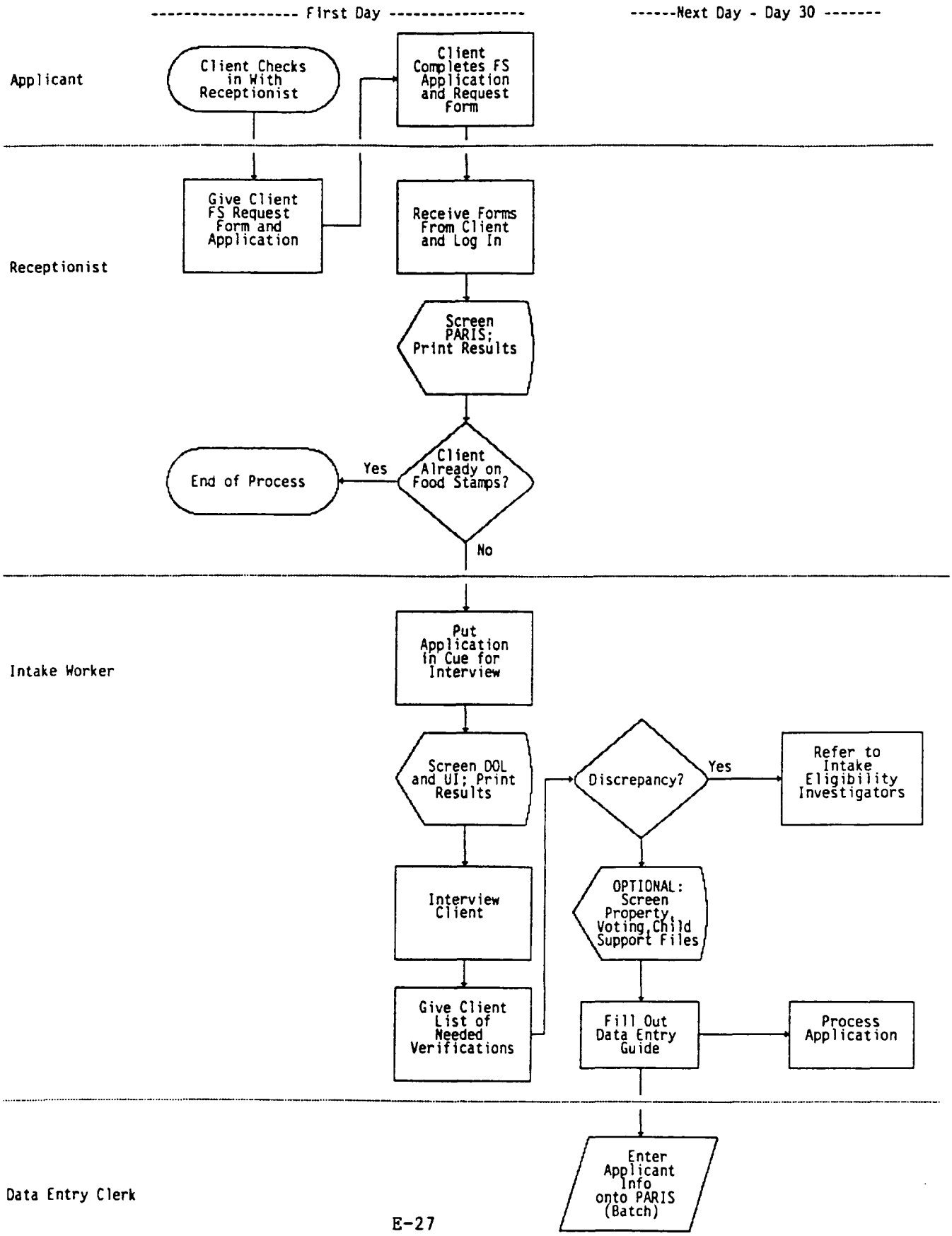

Table of Contents

EXHIBIT 2: FOOD STAMP APPLICATION PROCESS: MAIN OFFICE

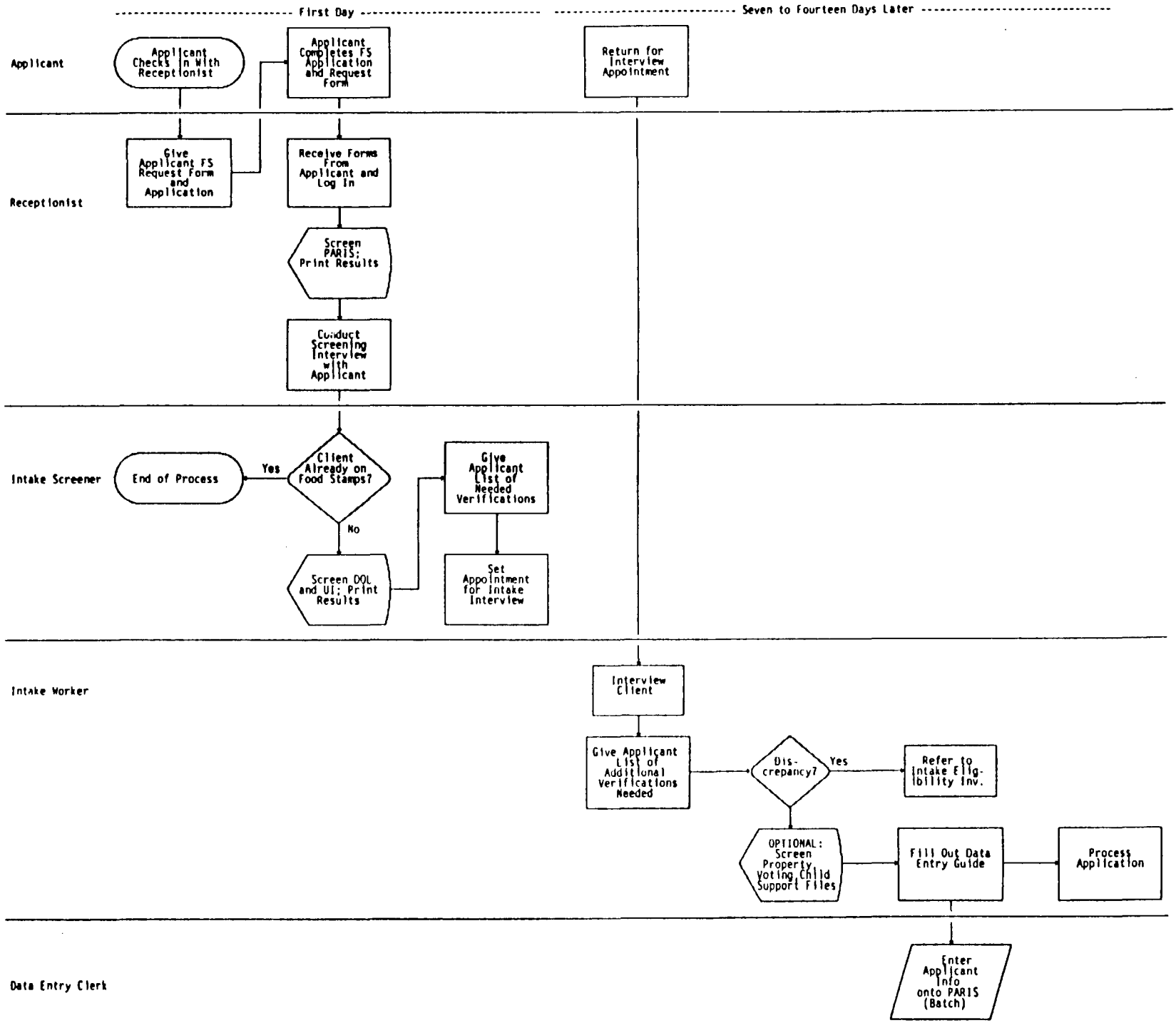

interview and to indicate whether new case numbers must be assigned or whether applicants have previously been recipients of public assistance.

Also, this match prevents duplicate participation in any public assistance program. The PARIS inquiry indicates if applicants are currently participating in an assistance program in any other Georgia county. If they are, they are informed that their cases must be either transferred to DeKalb or closed in the other county and re-opened in DeKalb. Thus, an individual cannot have two open cases in any assistance program at the same time.

When the client has completed the forms and returned them to the receptionist, she notes the time on the form and completes the PARIS screening for all household members (even children). Initially, searches are by name, using a "soundex" program. The receptionist then matches the results of this search with each SSN and date of birth reported by the applicant. PARIS provides information on current or prior (past 36 months) benefits history for food stamps, AFDC, and Medicaid. Matches are noted on Form 299, information is then printed and attached to the form.

Step 2A: Applicant Matching. After initial screening is completed, the receptionist locates the client's record (if one exists) or establishes a new paper record. If the client was previously active in another county, records are not transferred. Record packages (including the client's completed forms and the initial screening results) are placed on a rack in reverse order of arrival. "Rack" times are also recorded on each Form 299. Intake workers take the application packages out of the rack and complete Clearinghouse inquiries for each person listed on each application form. Hardcopy is obtained of all match attempts, regardless of whether or not a match is made.

Step 2B: The Screening Interview. At the Main Office, intake workers conduct short screening interviews which take place in a corner of the receptionists' area, out of view of the general waiting room. Usually, this interview lasts five to ten minutes, although some last up to 25 minutes. The purpose of this interview is threefold: to determine for

which programs the individual is applying; to inform the applicant about what other programs s/he may qualify for; and to inform the applicant of what verifications will be needed in order to process food stamp and/or AFDC applications. If, as a result of this interview, the applicant wishes to proceed with either a food stamp and/or an AFDC application, the screener will schedule an indepth intake interview. The elapsed time between screening interview and the intake interview is typically 7 to 14 calendar days. Expedited food stamp applicants are given appointments either that same day or the next day.

Step 3: The Intake Interview. At the Warren Street Office, the intake interview takes place the same day that the applicant arrives (usually from one to four hours after arrival). There is a 7 to 14 day delay at the Main Office. Intake workers complete the Food Stamp Application Interview Guide during the interview. Applicants are asked for detailed information on household composition, earned and unearned income, assets, resources, and shelter and medical expenses. If there is a discrepancy between what clients report and what intake workers have learned, either through the PARIS or DOL screens, intake workers query applicants during these interviews.

At the conclusion of the intake interview (which takes about 1.5 hours), the intake worker gives the applicant a checklist of verifications needed to process the application. The applicant can mail in or drop off the verifications. S/he is not required to meet again with an intake worker. The applicant bear the burden of proof to resolve discrepancies. As a result, DeKalb County denies a relatively large number of applications for lack of verifications.

Step 4: Followup and Benefit Determination. Intake workers transcribe the information from interview guides onto a seven-page Data Entry (DE) Guide (Form 286). These forms are then given to data entry operators for keying. It is at this point that each application is "known" to the PARIS system. The key entry of the DE Guide establishes a record for each case and each individual on the PARIS database. The data entry operator officially screens each member of the case and assigns client ID numbers for any person not previously known

to the system. This action is completed as soon as possible so that applicants cannot attempt to obtain benefits in more than one office. Once registered, screening will identify every applicant as part of a pending case.

The following day, after overnight processing at the central computer center, the intake worker receives case processing information through system-generated reports, including the Case Detail which mirrors, screen for screen, the entries on the DE Guide. The intake worker reviews this report for accuracy and must initial and date it. The eligibility worker will also receive a Case Change Notice with budgetary calculations showing eligibility and potential benefit levels if there are no other changes in the applicant's data before the case is brought to final disposition.

Caseworkers consider the process of changing or adding information to PARIS as cumbersome, not only in terms of completing the client change forms, but also with respect to the volume of paper generated with each change. Consequently, intake workers will often hold data entry guides for a few days while awaiting needed verifications. To some extent, this delay prevents the system from functioning in the way it was designed and contributes to inaccurate statistics reflected on county and state level reports.

Finally, intake workers may access the county databases described earlier, or they may ask for detailed investigation of certain cases by the special investigations unit.

A final information source available to intake workers is the PARIS interface with the Birth Records Index File. This allows access to birth records from 1957 through 1983 through online inquiry. To ensure confidentiality, access to this screen, entitled PARIS Birth Inquiry, is limited to one designated Data Entry Operator (and an alternate) in each local office. The intake worker completes a Birth Record Index File Form 334 to obtain birth record information. This form is submitted to the designated data entry worker for research of the Birth Record Index File. The needed information is recorded from the screen and returned to the eligibility worker. No screen prints are allowed.

Table of Contents

When the application is complete and all verifications have been received, PARIS will automatically determine client eligibility for benefits, compute benefit amounts, and produce client notification forms. The original form is mailed directly to each applicant from the State's central office. Copies are received by local offices within four to five days. In the case of expedited services, benefits are automatically issued before applicants produce all necessary verifications. Manual ATPs are virtually unheard of in DeKalb County.

Table of Contents

THE EFFICACY OF THE APPLICANT-MATCHING SYSTEM IN GEORGIA

This section explores the effectiveness of applicant matching in Georgia. First, results from the quantitative cost-benefit part of the that are particular to Georgia are summarized. Then, the qualitative perceptions of local and State staff on the utility of applicant matching are explored, including effects on error rates and deterrence.

MEASURABLE COSTS AND BENEFITS OF APPLICANT MATCHING

The costs of applicant matching include staff time to both screen cases and to follow up on whatever discrepant information is discovered through the applicant-matching process, as well as charges associated with using the automated databases. The staff time spent on screening was measured through time motion studies conducted in the DeKalb offices, while followup time was measured on worker time logs associated with each case.

The benefits of applicant matching include reductions in benefit payments based on information obtained from matching, as well as denials of benefits to clients who would have been certified in the absence of matching information. These benefits were measured by abstracting information from a sample of cases (204 that went through to final certification or denial) on: (1) applicant reports of household situation; (2) household situation on which the final benefit determination is based; and (3) whether any identified changes could be attributed to computer matching. Changes attributable to applicant matching were translated into changes in food stamp, AFDC, and Medicaid benefits and projected over the period of time during which the applicant would have received the overpayments.

Information Obtained from Applicant Matching. Information obtained from applicant matching in Georgia included data on the applicant's current and prior receipt of public assistance benefits, recent wage history, data on receipt of unemployment benefits and, in Dekalb County, data from county records on such items as real estate ownership and receipt of child support payments. The extent to which these databases were accessed varied widely. Some of the databases were routinely checked, such as the benefit history records (for over 90 percent of the cases) and the wage history

Table of Contents

information (a little under 90 percent of the cases). Accessing unemployment benefits information was more episodic, occurring for just under half of the applications.

In contrast to this routine or at least fairly common usage, the county records were infrequently used to match applicants. The most common match for county records was to the real estate files, which were consulted for only 2 percent of the applicants.

There was also wide variation among data sources in producing information on applicants ("hits"). The highest level of hits occured on wage records, where over three-quarters of the match attempts produced information about applicants. The next highest was benefit history records, where 62 percent of attempts produced information on applicants. The level of hits was much lower for unemployment benefits and real estate records -- about one-third for each of these databases.

These matches rarely uncovered discrepancies in the applicant-reported information. About 10 percent (or less) of the matches uncovered discrepancies. For some data sources (wages for example) the rate was under 1 percent.

Costs of Applicant Matching. The costs of obtaining matching information were generally quite low. Total costs for matching the 204 completed cases were only $832, or about $4 a case. About 15 percent of this total is the cost of accessing the computerized databases -- roughly about 26 cents to screen an individual against a single database. The remaining costs can be attributed to staff time for screening cases and following up on match results.

Staff costs are low because performing matches on computer terminals is not a time-consuming process. For example, benefit history screening, the most commonly performed match, took less than one minute to perform, producing a staff cost of about $0.40 an attempt.

Similarly, following up on match results required very little staff time. This was because so many cases involved little or no followup time at all. Of course, where a match did not

produce a hit, there was no followup time involved. And, even where there was a hit, if the match results simply corroborated the applicant-supplied information, the amount of time spent following up was very small.

Benefits of Applicant Matching. Benefits from applicant matching can occur where benefit levels are affected by the results obtained from computer matching, or where denials could be attributed to these results. In Georgia, there were only three instances (out of a total of 204) where benefits were affected by discrepancies uncovered through applicant matching. None of these cases was a denial.

This result produced a small total savings of $603. Of this total, the largest proportion was due to matching on the unemployment benefits database. Savings from this one database were about $566, or well over 90 percent of the total amount. The next largest savings was from screening the case history files, which saved a total of about $37. No savings were obtained from any other databases.

Relationship of Benefits to Costs. Overall, the benefits of applicant matching in Georgia did not outweigh the costs. The ratio of benefits to costs was .72 to 1, and the net savings (savings minus costs) was -$229.00.

The only effective database, from the standpoint of net savings, was the unemployment benefits database. Matching on this database generated a net savings of a little over $500. All other matching efforts actually lost money. For example, wage record matching realized a net loss of over $400. The reasons for these losses are obvious: the cost, while low, were tangible, while the benefits of matching were non-existent.

Applicant matching in Georgia appears not to be cost-effective at least in strict quantitative terms. Given how very few errors seem to be uncovered through applicant matching, it is surprising that applicant matching comes as close to being cost-effective as it does. This is because even the very small number of applicant errors, when translated into monthly benefit savings and projected over time, are almost enough to outweigh the low costs and produce a favorable benefit-cost ratio.

STAFF PERCEPTIONS OF APPLICANT-MATCHING EFFECTIVENESS

Effects on Payment Error Rates. Staff believe that the prevention of duplicate benefits is a major achievement of PARIS. In addition, automating food stamp management has allowed a number of repetitive or mathematical functions including client budgeting, eligibility calculation, and benefit determination to be handled automatically. When workers manually performed these tasks, results showed a high incidence of error. By all accounts, PARIS successfully performs these functions, so its contribution to decreasing the error rate may be considerable.

With regard to the Clearinghouse, staff believe that checking applicant-reported information against DOL wage and UI files has had a major effect on payment error rates. Information for DeKalb County indicates a reduction in the error rate from 22.8 percent in 1985 to 9.54 percent in 1986. It is this perceived benefit that has pushed the State to implement the Clearinghouse statewide.

In particular, the UI data are considered useful because the information is up-to-date. However, according to local office staff, UI errors are such a minor problem that "It was like hitting a fly with a hammer." Misreported wage income, on the other hand, was a major cause of payment errors, and staff believe that applicant matching has significantly reduced these errors. Finally, the other databases available in DeKalb County (e.g., voter registration, property records, etc.) are considered of little effect and these sources are rarely checked.

Deterrence Effects. It is virtually impossible to estimate the effect that applicant matching has had on deterring misreporting by applicants. Staff generally agreed that, soon after the Clearinghouse was installed in DeKalb County, word was "out on the street" that food stamp caseworkers had access to DOL and UI. Just what effect this information had on deterring applicants from misreporting, however, is not known.

Even though staff have no direct evidence to support their views, they generally believe that applicant matching has an important deterrence effect that goes beyond the small

amounts of data collected from either PARIS or DOL. The presence of the computer terminal is thought to deter applicants from misreporting. Further, applicants may believe that caseworkers have access to more information than they actually can acquire.

Effects on Case Processing. The benefits of applicant matching are not limited to deterience. Supervisors and staff agree that the majority of their clients do not misreport their circumstances. An important achievement of matching is that it speeds up the certification process by providing confirmation or verification of client-reported information much sooner than was possible under the old "paper" system.

The results of an evaluation conducted soon after the Clearinghouse was implemented tend to confirm that applications were being processed much more quickly. The county had been experiencing problems meeting the standard of promptness (SOP) for certification; the number of applications over the SOP deadlines averaged 100.3. per week for a four-month period. In the four months after the Clearinghouse was installed, that average dropped to 38 applications per week. However, it is unlikely that the Clearinghouse was responsible for the entire decrease, as DFCS was, at that same time implementing several other procedures designed to resolve the SOP problem. Clearinghouse's main contribution has been to eliminate the long delay in getting confirmation of wage or unemployment benefits information from the Department of Labor.

The other data sources available to caseworkers -- county property records, child support records, traffic violations, and so on -- are not regularly consulted. In fact, some caseworkers have never used these optional data resources. Staff at the Main Office, where AFDC applications are processed, are more likely to use these databases in tracking down addresses of absent fathers -- just to ensure that they are, in fact, absent.

Table of Contents

Table of Contents

APPENDIX F

THE USE OF COMPUTER-ASSISTED VERIFICATIONS OF APPLICANT-REPORTED INFORMATION IN WYANDOTTE COUNTY, KANSAS

For further information contact:

Department of Social and
Rehabilitation Services
Income Maintenance Division
Docking State Office Building
Topeka, Kansas 66612-1570

Table of Contents

ACKNOWLEDGEMENTS

This case study of applicant matching in Kansas was made possible with the kind assistance of many people. The author, Ruy Teixeira, gratefully acknowledges the help of: Cathy Casserly, who accompanied me on the site visit; Carla Nakata, Rick Racine, John Rangel, Candy Shively and many others too numerous to mention, who gave freely of their time during our visit to Kansas; the many eligibiity workers in the Wyandotte County office who helped us to measure the costs of conducting applicant matching; and Cathy Gesling who abstracted data from the applicant case records. I would also like to thank Melody Bacha (the Project Officer), John Hitchcock, Edward Speshock and Jill Herndon of the Food and Nutrition Service who provided useful comments and suggestions throughout the course of this project and Mike Puma who directed the study for Abt Associates Inc. Finally, the report was produced by Marsha Strother.

Table of Contents

APPLICANT MATCHING IN KANSAS

This study of applicant matching is based on three types of information: interviews with State officials and local staff from the Wyandotte County welfare office conducted during a five day site visit in July 1987; the abstraction of data from the application records of all individuals applying for food stamps in Wyandotte County during a period of four weeks; and, worker time logs and time motion studies.

SUMMARY

Operational Description. Applicants seeking public assistance in Wyandotte County generally appear in person during business hours Monday through Friday. Initially, they will be asked to complete two forms by the receptionist -- a summary sheet that collects only limited information on the household for whom benefits are being sought (e.g., name, Social Security number, income) and a long application form that collects detailed information about each individual related to eligibility for benefits including sources and amounts of earned and unearned income, resources, and expenses.

The summary sheet is used to determine whether the individual is in need of expedited service. The full application form is sent to the data processing unit to match each household member against FPT (food stamps) and CENPAY (AFDC and Medicaid), the State's online case management systems. This check, done for essentially all applicants, determines if anyone in the household is currently receiving, or has received in the past, food stamps, AFDC or Medicaid benefits anywhere in the State. This ensures against duplicate participation and, if the applicant was a previous beneficiary (a match was found in about 64 percent of the cases checked), provides prior case information that can assist eligibility workers to make a correct determination regarding the recent application.

The intake interview is usually scheduled within two or three days and the applicant is provided with a list of verification documents they will need to bring with them. (Two interview appointments are initially scheduled to allow the applicants some flexibility in completing the process. A decision to waive the face-to-face interview may be made

based on regulatory requirements.) During the intake interview, the eligibility worker reviews the application with the applicant, who fills out parts of the form that have not yet been completed. After the interview, the caseworker fills out a form requesting computer verifications.

Those verifications typically include online screening of all individuals 16 years of age or older against: records of employer-reported wages and Unemployment Insurance (UI) benefits for both Kansas and Missouri (a match is found for about 56 percent of the applicants checked on wages and 25 percent on UI); against motor vehicle records (yielding a match about 41 percent of the time); and against county real estate records (producing a match about 11 percent of the time). Information on Child Support Enforcement records can also be obtained, but this is rarely done.

Information obtained from any matches is printed out and attached to the verification forms. These are then forwarded to the eligibility worker responsible for the case. The eligibility worker reviews all of the information provided by the applicant as well as any discrepancies uncovered through the computer matches that have been done (e.g., unreported wages). Generally speaking, the burden of resolving such discrepancies is placed upon the applicant; however, eligibility workers sometimes conduct independent verifications such as contacting employers.

Incidence of Detected Discrepancies. Of the 208 applications that went to final determination or denial, only 6 had a discrepancy that was detected through applicant matching and which affected the household's benefits; one of these six was an outright denial.

Costs of Applicant Matching. The cost of conducting applicant matching consists of the labor needed to screen client-reported information, the associated computer costs, and the cost of resolving any discrepancies that are detected. For the 208 applications in our sample, the total cost of applicant matching amounted to only $940 -- an average of about four and a half dollars per application.

There are three reasons why the costs are so low: the time required to screen an application on the computer is only a few minutes; computing costs are generally small for such simple transactions; and, the number of discrepancies detected is relatively small, and for the most part, the burden of resolving them is placed on the applicant.

Savings From Applicant Matching. Even though only six cases were found to have benefit changes, these cases generated about $2,134 in savings from reduced transfer payments (i.e., food stamps, AFDC and Medicaid) and avoided administrative costs. About two-thirds percent of these savings were a result of the match against the motor vehicle records with most of the rest coming from the real estate and UI screening.

Combining the savings and costs produces a benefit cost ratio of 2.3, i.e., for each $1 spent on applicant matching a little more than $2 is saved. Clearly, applicant matching is cost effective despite the low incidence of detected discrepancies. The costs are very low and the benefit savings associated with the small number of errors is large when projected over the time period during which the overpayments would be expected to be paid in the absence of applicant matching.

Other Benefits of Applicant Matching. In addition to the quantitative benefits noted above, State and local staff pointed out a number of other important benefits attributable to applicant matching: clients are deterred from misreporting because they don't know how much information caseworkers have access to; caseworkers get a good picture of the applicant's situation without inefficient and distracting attempts to get this kind of information on their own; and, the morale of caseworkers is improved because they feel that they are more efficient and accurate in their determinations.

ORGANIZATION OF CASE STUDY

This case study is divided into three parts: a discussion of aspects of applicant matching that are common throughout the State of Kansas including the management and characteristics of the Food Stamp Program, the development of computer matching, a description of the databases and computer systems used, and future development plans; a description of those

Table of Contents

aspects of applicant matching that are specific to Wyandotte County (the subject of our site visit) including the organization and characteristics of the Food Stamp Program in Wyandotte County, application and verification procedures, and county-level databases and computer systems; and, a discussion of the costs and benefits of applicant matching as measured in Wyandotte County.

Table of Contents

STATE DESCRIPTION

THE FOOD STAMP PROGRAM IN KANSAS

Food Stamp Program Administration and Management. The Department of Social and Rehabilitation Services (SRS) administers all social service and income maintenance programs in Kansas. Within SRS, the Income Maintenance and Medical Services (IMMS) area oversees operations of the Food Stamp and AFDC Programs. Income maintenance in Kansas includes the Unemployed Parent (UP) option for AFDC, a General Assistance (GA) program and, for Native Americans, a needy family commodities program. Native Americans may participate in either the Food Stamp Program or the commodities program (but not both), switching back and forth as they choose.

The Income Maintenance (IM) division of IMMS administers the Food Stamp Program, AFDC, and GA. In addition, the division is responsible for operating commodity distribution programs, including those for Native Americans and for charitable institutions (TEFAP), Low Income Energy Assistance (LIEA), Refugee Assistance (RA), and the Housing and Urban Development (HUD) Section 8 program. Income maintenance programs in Kanasas are State-administered, with the State divided into seventeen administrative areas. Each area is headed by a Chief of Income Maintenance, who has substantial administrative autonomy. Typically, an area is comprised of two or more counties, with the exceptions of the State's two large urban areas. Kansas City (Wyandotte County) and Wichita (Sedgwick County), are single-county administrative areas.

Caseload Characteristics. Kansas is a geographically large and predominantly rural State. Much of its caseload (47,261 in April 1987) is scattered across the State's rural counties, with most counties having fewer than 1,000 cases and many counties with under 100 cases. The three largest urban areas -- Wichita (Sedgwick County), Kansas City (Wyandotte County), and Topeka (Shawnee and Douglas Counties) -- account for about 40 percent of the State's food stamp caseload.

There are slightly more (53 percent) public assistance (PA) than non-public assistance (NPA) food stamp cases. In the urban areas, the percentage of PA cases is much higher. In recent years, the size of the food stamp caseload has been

Table of Contents

generally stable, with changes reflecting the unemployment rate. Because the employment situation in the western part of the State is deteriorating, there is reason to expect the food stamp caseload to rise, at least in that section.

Statewide food stamp applications averaged 3,443 a month in fiscal 1987. The average case actions per month in the State are: 3,194 openings, 3,879 recertifications, 4,165 closings, and 1,693 denials. The average household size for food stamp cases is 2.69 persons, with 2.83 persons per household for PA cases and 2.50 for NPA cases. The average benefit is $127.02 per household and $47.14 per recipient.

Food Stamp Payment Error Rates. During April-September 1986, the most recent for which data are available, the dollar-error rate was 7.2 percent and the case-error rate 18.1 percent. Preliminary data for October 1986 through March 1987, indicate that the dollar-error rate has fallen to around 4 percent. In general, the dollar-error rate in Kansas has been going down over the last six years. From a high point of 13.7 percent in fiscal year 1981, it has steadily dropped -- to 6.2 percent in fiscal 1986.

State officials attribute most of this reduction to a sustained effort directed toward combating earned-income errors, which are the most prevalent type of case error. Earned income errors accounted for about 60 percent of the dollar errors in April-September 1986. Error reduction has been achieved through the implementation of monthly reporting and periodic computer matches.

Other errors include household composition (8 percent of the dollar errors in the April-September 1986 reporting period); PA/GA errors (6.7 percent); income-in-kind errors (6 percent); and shelter-deduction errors (5.7 percent).

SYSTEM DEVELOPMENT

Creation of the Automated Case Management System. The CENPAY system, the automated case management system for cash assistance and medical cases, was originated in 1970-71. The system was designed to perform functions ranging from general record-keeping to automated issuance of benefits for these programs. The matching for applicants was -- and is -- considered only a constituent part of the overall functioning of the system.

Table of Contents

Relatively little formal planning went into the CENPAY system. Once the decision was made to develop an automated case management system for the cash assistance/medical cases, specifications for the system were established and given to a contractor. Modifications in the system have been made in-house over time as needs have arisen.

The FPT system, covering food stamp cases, was not instituted until 1978-79. The primary reason for developing the system was program expansion due to elimination of the purchase requirement which created a strong need for an automated database.

The FPT system also was developed with little formal planning. No advanced planning document was issued, nor a feasibility study conducted. Once the decision was made that an automated case management system was needed for the Food Stamp program, a committee of State program and data-processing personnel was created to establish specifications for the system.

These specifications were then given to a senior programmer in SRS' data-processing department, who designed the system in the first half of 1978. This work was done entirely in-house, without the assistance of outside contractors or consultants.

The FPT system was also developed to be responsive to changes in the laws governing the Food Stamp program in 1977. The thrust of these policy changes was to encourage administrators to view food stamp cases as "real" welfare cases, and take them seriously on this basis. The development of an automated case-management system for the Food Stamp program thus reflected this shift in perspective, as well as program expansion. As with CENPAY, the system was designed to perform a variety of functions pertinent to case management within the Food Stamp program, from record-keeping to automated issuance. Unlike CENPAY, the FPT system was developed in-house by a single programmer. When the development was completed, the in-house installation of the system was handled by five individuals from the data-processing department assigned to the project. Case-level data were automated, and the program tested in pilot counties

Table of Contents

before the final version of the system was installed statewide. In terms of training, the approach was more thorough than that used for the CENPAY system. State personnel went to the local areas and trained all staff on how to access and use the FPT system, rather than just supervisors. These individuals then passed this on to authorized caseworkers and clerical staff.

Development of Computer Matching. The use of online matching to the DES database for food stamp applicants was begun in 1978-79, when online access to DES first became available. The development of this access was both a response to policy changes calling for increased verification of applicants' income and a reflection of the technical evolution of Kansas' computer system.

As with the systems described above, the development of the online capability was not specifically directed toward the matching of food stamp applicants. Rather, the purpose was to make an important resource for verifying applicant income significantly more available than it had been before, when only hard copy could be obtained. Since verifying applicant's income at application time is of critical salience, the online capability has been used for applicant matching since its inception.

Initially, the online system in SRS consisted solely of three terminals, one in Topeka, one in Kansas City and one in Olathe, connected directly to the DHR mainframe. The present system, with an online terminal in each local administrative area connected to the local minicomputer, came into being in 1981-82.

Implementation of the system currently in place for matching the DES database was straightforward; at the State level, it was simply a matter of running the telecommunications link between the two mainframe computers (at this point, simply an internal cable connection). At the local level, microcomputers, fitted with IBM keyboard emulators to simulate IBM "dumb" terminals, were connected to the minicomputer in each area. The State personnel who connected the terminals in the local areas then instructed selected local staff -- generally supervisors -- on how to access the

DES database using these terminals, wished them luck, and returned to Topeka.

The use of the Missouri wages/UI database for online matching of food stamp applicants is relatively recent, going back to 1984-85, when online access to this database first became available. Prior to this, matching was restricted to periodic batch tape matches of recipients. Development of the ability to do online inquiries was spurred by quality-control findings about error problems in border counties attributable to income received in Missouri but not reported in Kansas. Once this ability was developed, it was utilized to check applicants in these counties for income earned in Missouri. Again, the online capability was not expressly developed for use with applicants but rather for the overall purpose of income verification from these particular sources.

The matching to the Missouri data required little real planning. Once it was resolved that the capability to make online inquiries in Kansas was something SRS needed, the only real requirements were: (1) the permission of the appropriate Missouri authorities; (2) terminals to be connected to the local minicomputers in the border counties; and (3) the physical connection between the Missouri and Kansas central mainframes. None of these entailed complicated planning or presented any special technical problems.

Beyond this, State personnel traveled to the local areas where this matching was to take place, modified the microcomputers used to access the DES data so that they could access the Missouri data as well and instructed local staff on how they could do inquiries on the Missouri database.

The origins of the Wyandotte County motor vehicles and real estate online matching for applicants go back to around 1977, when the county first computerized its records. Since caseworkers were constantly visiting the county courthouse to check records for information on applicants, online access to these records from the welfare office was arranged so that these time-consuming trips could be avoided.

Table of Contents

No real planning was needed or done to enable access to these databases. Once permission was granted by the county to access these records, organizing the actual link between the welfare office and the county mainframe was a minor task, as was purchasing the requisite hardware. Implementation of this matching system consisted of purchasing, with State assistance, the two IBM terminals and associated controllers needed at the local office and having a telephone line and modem dedicated to the communication between the county mainframe and these terminals. Once county data-processing personnel had instructed several staff at the welfare office on how to access and use the system, these individuals passed on their knowledge to all workers at the office who had a legitimate need to do inquiries on the county databases.

Problems Encountered. The problems in the development of the applicant-matching systems have, thus far, been fairly minor. There have been some concerns about privacy and the security of data accessed for computer matching. This, for example, was really the only concern of the Kansas DHR in allowing access to their data. Such problems proved, however, easy to deal with; once a system of security codes was put in place for users, DHR has been very cooperative in maintaining, and even expanding, access to their data.

In terms of negotiations with other agencies and governmental entities, this has not been much of a problem, either. As mentioned above, the Kansas DHR did have a concern about data security, but this did not prevent negotiations from being amicable and speedily conducted. And Wyandotte County had no objections to allowing access to their databases, provided it was for a legitimate purpose, and were happy to comply with the local welfare office's request.

Probably the most difficult negotiations were with Missouri over having access to their data. These negotiations did drag out over time, so there was a significantly longer lag between the decision to pursue online matching to this data source and obtaining the necessary permissions, than for the other data sources. Much of this may be attributable to the fact that these negotiations were State to State, which always creates certain problems. But since the issues to be resolved between the two States were actually minor, no

particularly strong disagreements came up during the course of the negotiations.

Development Costs. At this point, no information is available about the costs of developing the CENPAY system. Even if available, the attribution of these costs to applicant matching in particular would be a difficult, and not very meaningful exercise as this is a small part of the overall system.

The costs of developing the FPT system really devolve to the staff time that went into planning and implementing it. This staff time consisted chiefly of the programmer's time during the period in which the system was planned, and the time the additional personnel assigned to the project spent on it during the implementation phase. Beyond this, since there was no equipment purchased and no outside help involved, the additional costs were virtually non-existent.

In contrast, the costs of developing the DES, Missouri, and Wyandotte County computer-matching systems were confined almost exclusively to the hardware necessary to run the systems and minor staff costs for installation of the equipment and brief training sessions for local personnel. There were effectively no planning and software development costs at all.

The hardware costs were: seventeen microcomputers with keyboard emulators ($2,000 per computer for 17 administrative areas, totaling $34,000); the connect link between the central mainframe and the DHR computer for the DES matching ($200); the connect link between the Kansas and Missouri central mainframes for the Missouri wages/UI matching; and two IBM terminals, a controller and a telephone link and modem for the Wyandotte County matching (the terminals are about $1300 apiece). Finally, the Series 1 minicomputers, which facilitate applicant matching, but aren't necessary for it, are about $75,000 apiece over 17 areas, for a total of $1,275,000.

It is important to keep in mind that the costs described above are those associated with developing online computer matching in general on these databases. Which part of these

costs to specifically ascribe to applicant matching is a difficult, if not impossible, question to answer.

STATE DATABASES USED TO VERIFY APPLICANT-REPORTED INFORMATION

Public Assistance Benefit Records. SRS maintains computerized records on all food stamp, cash assistance, and medical assistance clients. These records are kept on two separate systems: CENPAY for cash and medical assistance; and FPT for food stamps. The two systems are linked electronically so that it is possible to simultaneously search both databases.

Both databases are used for case management, record-keeping, and benefit issuance. Day-to-day systems supervision is the responsibility of the Information Resources Division within SRS.

The CENPAY database includes all cash assistance and medical cases that are currently open or have closed within the last two years. Each case record includes: case head name, address, SSN, and date of birth; names and similar identifiers for all other case members; assigned case number; date when case was first certified; programs for which benefits have been received and the status of the case within each program; certification periods and recertification dates; monthly benefit amounts, where applicable; history of benefits received within each program, including check numbers and dates for disbursements; and key information on the applicant's economic situation (chiefly components and totals of earned and unearned income).

The FPT database contains all food stamp cases that are currently open or have closed within the last six months. (Denials within this time period are also included.) Each case record contains the following information on the designated head of the case but not for other case members: name, address, SSN, date of birth; assigned case number; date when the case was first certified; current status of the case within the food stamp program; certification periods and recertification dates; monthly food stamp amounts, where applicable; history of food stamp benefits received; and, a variety of information on the applicant's household situation (earned and unearned income, shelter expenses, medical and other deductions).

Table of Contents

Both the CENPAY and FPT databases are essentially up-to-date, so the data in these systems reflects current situations. There may be minor delays in the local offices with regard to data entry if data-processing departments are busy. Data are processed overnight by the State and can be accessed the day after entry.

The primary identifier used to search these databases is the client's name -- usually the last name plus a truncated first name. They can also be searched using other identifiers such as SSN, date of birth, and case number.

There is online access across the State through dedicated terminals in area offices. Clerical workers in the area offices perform the actual inquires on the terminals, generally located in a special restricted area. Workers in remote offices call their inquires into the area offices.

Kansas Wage and Unemployment Benefit Records. This database, initiated in 1967, is maintained by the Kansas Department of Human Resources (DHR). Information includes wages and unemployment insurance (UI) data on all individuals in the State eligible for unemployment insurance benefits. The two parts of this database must be separately accessed. Information on wages consists of quarterly reports sent into DHR by Kansas employers; information on UI benefits consists of DHR's records of UI transactions in the State.

Wage records cover the previous eight quarters and include: SSN; the name of each employer who paid wages to an individual in the last eight quarters; and, the amount paid to the individual in the quarter by each of these employers. The wages database contains quarterly data on wages as reported by employers. These reports are due one month after the end of any given quarter. Only 3 to 4 percent of employers submit late reports--according to DHR). For example, the first quarter ends March 31, so employers have until April 30 to submit wage reports.

Data are batch key entered into the system at irregular intervals. DHR allows two months for data input. Thus, employer reports for a given quarter are added to the database by the end of the succeeding quarter. For example,

Table of Contents

the first quarter reports, received by the end of April, are all key entered by June 30, the end of the second quarter.

Wage data, then, are at least a month old, are frequently three months old, and can be dated by five months or more -- if the wages are earned at the beginning of the quarter and aren't keyed in until the end of the succeeding quarter. Because employer reports are input in batches over time, an inquiry on a given individual may yield different information, depending on when during the current quarter the inquiry is done.

In Kansas, all wage and salary earners are in the UI program except employees of the Federal government, the military, and private non-profit organizations with four or fewer employees. Persons employed by non-profit organizations for fewer than twenty weeks a year are also excluded unless the nonprofit organization has ten or more employees -- in which case these part-time workers must be included. All State employees are included in the UI program.

A UI record for an individual covers all benefits paid in the preceding eight quarters. It includes: name; SSN; address; date of birth; sex; race; claims established during this time period; the filing and effective dates and duration of each claim; and the date, number, and amount of each check issued for each claim. The UI database is immediately updated with new claims as they are established and as checks are issued.

For both the UI and wages components of the DHR database, the only identifier for inquiry purposes is the SSN. The database does not allow name, date of birth, and so on as identifiers.

Workers in local welfare offices have online access to this database through dedicated terminals in the central offices of each administrative area. At the central office, access is direct; in the other, rural offices, workers telephone the central office to request online inquiries. These inquiries are generally done by designated and trained clerical workers.

Table of Contents

The Kansas wage and UI data are also used to match against records of active recipients of public assistance as required by IEVS. These batch matches are conducted on a monthly basis, though any given individual is likely to be matched only once a quarter.

Missouri Wage and Unemployment Benefit Records. This database is maintained by the Missouri Division of Employment Security. It contains about the same data elements as the Kansas wage/UI database, uses the same identifier, and is updated with similar frequencies. The key difference is time period. The Kansas database contains wage and UI data for the previous eight quarters. In Missouri, the database contains information the past five years.

The Missouri data are available online in Kansas only in areas of the State which border Missouri. (Other areas may call Topeka and request that an inquiry be done on a terminal located there.) Generally, the dedicated terminals used to access Kansas DES data are for the Missouri inquiries. As with the DES inquiries, specially designated and trained clerical workers make these inquiries.

These data are not routinely used to match against records of ongoing recipients of public assistance though this may be done on a discretionary basis.

FEDERAL DATABASES USED TO VERIFY APPLICANT-REPORTED INFORMATION

Bendex Benefit Records. In Kansas, BENDEX data are accessed through Third-Party Queries (TPQ). These requests are submitted to the local office of the Social Security Administration, which electronically transmits the TPQs to Baltimore. Replies are returned to the local SSA office, which, in turn, routes them to the requesting welfare office.

Though this sequence is lengthy, it is possible to obtain information to use during the certification process. Although hardly a routine part of verification for most cases, caseworkers do employ these queries in situations where there is reason to suspect the existence of these benefits and when no other source of verification is available.

Table of Contents

These data are also used to match against records of ongoing recipients on a monthly basis batch runs.

SDX Benefit Records. Each month, Kansas SRS receives a tape from SSA which provides information on all SSI recipients in the State. Hardcopies are distributed to each administrative area office. Local caseworkers can check these printouts if they wish. This check is not, however, a typical part of verification procedures.

BEERS and IRS 1099 Records. These data sources, matched on a monthly basis, are only used to verify records of ongoing recipients of public assistance. Applicants are not included in these batch matches until their applications are approved and entered on the database.

COMPUTER HARDWARE AND SOFTWARE

Central Computer. The computer hardware systems used in applicant matching in Kansas are organized around a central IBM 3084Q mainframe computer located in Topeka. The central mainframe is connected to a Series-1 IBM minicomputer in each administrative area. The connections with the minicomputers are through lines leased from local telephone companies. It is these minicomputers with which terminals in local offices are communicating. The minicomputers receive a query from local terminals, pass it to the mainframe, which communicates back to the minicomputers, which then relay the reply to the local terminals. Locally input database changes, on the other hand, are stored in the minicomputers during the day and then relayed to the mainframe, where they are batch processed overnight. Results are sent back to the minicomputers the next morning, where they can then be accessed online from the local terminals.

This loop encompasses the circuit for accessing the FPT and CENPAY databases. It is more complicated for Kansas wages/UI inquiries, though these still pass through the Series-1 minicomputers to the central mainframe. The inquiries are passed from the central mainframe to another mainframe, an IBM 4381 maintained by DHR, by means of a telecommunications link between the two computers. The DES database resides on the DHR mainframe, which receives an inquiry from the central mainframe, searches the DES database, passes the result back to the central mainframe, which sends the information on to

the mini, and through the mini, to the local user who made the inquiry. This loop, though more complex, is still straightforward in computer terms and returns online results quickly.

Access to the Missouri wages/UI database is also through the central mainframe, though here the loop is still more complex. The central mainframe in Topeka receives a local inquiry and passes it along to Missouri's central mainframe, its counterpart in Jefferson City, through a telecommunications link between the two computers. This mainframe then passes along the inquiry to the mainframe maintained by Missouri's DHR, which then searches the Missouri wages/UI database and passes the result back to its central mainframe. Once Missouri's central mainframe receives this result, it passes the result back to the Topeka mainframe, which relays the information to the local user, with the minicomputer as an intermediary. Again, while complicated to describe, the transaction is straightforward in computer terms and proceeds quickly.

Communications. The central computer, the minicomputers and the terminals located in the local welfare offices are linked by leased telephone lines and communications controllers which manage the data flow among these various network points.

Data communications are handled through IBM's Customer Information Control System (CICS) which supports the interface between end users and the central computer using the teleprocessing method, Virtual Telecommunications Access Method (VTAM). VTAM provides for the direct transmission of data between terminals and management/monitoring functions.

Software and Operating System. The central mainframe computer used for all applicant-matching procedures employs the Multiple Virtual Storage operating system in Extended Architecture (MVS/XA) which is designed to perform system control programming in online, interactive computer networks. The primary programming development and production language used within the computer system is COBOL. This includes all the applications relevant to applicant matching. However, the future CAESCES automated case

management system, which will include many applications used for applicant matching, will use the NATURAL programming language.

Security. Within the CENPAY/FPT systems, access is restricted to designated clerical workers in the data processing departments of the local offices. Caseworkers are not permitted to access the system on their own. The local worker access codes for the DES database are regulated at the State level. SRS, in conjunction with DHR, approves access to the database on an individual basis for specific workers in each local office; for example, Wyandotte County has five approved access codes for the five clerical support workers authorized to access the database. In the absence of password-sharing, this effectively restricts access to these workers. At one point, local workers had unrestricted access to the DES database, however, this was terminated and replaced by the present system because of instances in which this access was used to violate the privacy of the database. Access to the Missouri wages/UI database is even more restricted; access is limited to two individuals at each local office -- one from Child Support and one from Income Maintenance.

FUTURE DEVELOPMENT PLANS

Officials in Kansas expressed interest in expanding their applicant-matching systems in a variety of different ways. On one level, they showed interest in gaining access to databases not yet included in their computer-matching operations.

In terms of county records, several officials expressed interest in gaining access to local school-attendance records. With the exception of Sedgwick County, where Wichita is located; however, the level of computerization is inadequate to even consider developing a capability for such online inquiries at this time. No interest was expressed at the State level, however, in expanding access to county-level motor vehicle or real estate records, on the grounds that resource errors were not a particularly serious quality control problem.

Another data source that officials expressed interest in adding was Federal and military payroll records. While these two employers have a considerable presence in the State, DES

does not -- and cannot -- include information on wages received by individuals from these sources. No plans are in the works to do this, though, since they have been making no headway on getting permission to do such a match.

The key development in Kansas for applicant-matching systems will not lie in making new databases available for computer matching, but rather in expanding access to already available databases. There are very firm plans --in fact, implementation is already proceeding -- to develop the capability of doing online inquiries to several different databases that are currently only batch matched. The development of these online inquiry capabilities is a constituent part of the development of the new automated case management system in Kansas, CAECSES (Comprehensive Automated Eligibility Child Support Enforcement System). The CAECSES system is based on the system currently being implemented in Arizona (AZTECS), which, in turn, is based on the system in place in North Dakota and Alaska.

The development of this system goes back to 1985, when the Kansas SRS first became serious about developing a new, automated eligibility system to replace CENPAY/FPT. The first step was deciding which State to model their system after (as noted above, North Dakota was selected).

The next step was to convene a task force of program and data-processing people to have input into the shape of the system. Once input from the task force had been received, the coordinator wrote the advance planning document for the system, developed the appropriate software specifications, and let the project out for bid to an outside contractor. The bids were then evaluated and a contractor was selected who then proceeded to program the modifications of the model systems necessary to fit the specifications developed by Kansas.

Tests will be made of these modifications early next year, including the use of Franklin County as a pilot county in the summer of 1988. The plan is to begin converting cases after the pilot county test and to have conversion finished in eighteen months, by December 1989.

Table of Contents

There are a number of interesting features of this system including: the use of NATURAL as the programming language, in contrast to the near-universal use of COBOL in the prior systems; extensive privacy/security arrangements far beyond the ones operative in the CENPAY/FPT systems; automated follow-up features, such as letter issuance and alerts on previous misreporting attempts; and a vast expansion in terminal accessibility, which will put a terminal on each caseworker's desk and even on the desks of their support personnel. Of most salience to applicant matching, of course, is the extension of online inquiry capabilities to SDX, IRS, and BEERS. The specific form these databases will take is essentially identical to the form in which information is currently sent from SSA and IRS to the Kansas SRS.

The BENDEX data are conspicuous by their absence from the list of databases that will have online inquiry capability in CAECSES. This is because the format in which BENDEX data are organized by SSA makes it impossible to display these data on terminal screens, without major modifications of the planned system. Kansas has elected not to request these major modifications, so BENDEX matching will continue in the monthly batch match form described in the section on recipient matching. In terms of the databases that will be available online, it is worth noting that the IRS and BEERS databases will have no data on any given food stamp applicant unless that individual has already been on the assistance rolls for the State, and hence has been matched with the IRS and/or SSA databases because of this. In contrast, the SDX database will have information on an applicant's SSI benefits for those persons receiving these benefits in Kansas -- there will be no connection to whether or not the individual has previously been on the assistance rolls.

Plans for DES online matching in the new system are still up in the air. The preference of SRS officials is to make online DES matching available from every terminal that can access the CAECSES system. There are still some procedural questions to be resolved on this, as well as whether DES would be accessed from within CAECSES, or by logging off of the CAECSES system and onto the DHR computer. SRS officials are very optimistic, however, that they will be able to extend DES access to all the terminals.

Table of Contents

Another existing database for which access is being expanded is Missouri benefit history records. Access to this database has been available for several years but has never been utilized. The connection between Kansas' central mainframe and Missouri's DHR computer goes through Missouri's central mainframe, on which all the benefit history records maintained by Missouri's Division of Family Services reside. In effect, this has made Missouri's benefit history records accessible since the day the Kansas/Missouri link was enabled. For some reason, however, this knowledge was never effectively communicated to local officials and caseworkers in the border counties. Hence, they accessed Missouri's wages/UI data with no idea they could also look at Missouri's benefit history files. This oversight has recently been discovered, and State officials have acquainted appropriate local officials with the availability of these data. As a result, the use of Missouri benefit history files for applicant and other kinds of matching should currently be taking place in the border counties, though this was not the case when the site visit to Kansas was conducted.

Finally, there are some exciting plans afoot in Kansas for a multistate network that would offer online inquiry capabilities to a variety of databases in other States. This network, while funded and organized by the Division of Child Support Enforcement, would be available to Income Maintenance in Kansas for applicant and other types of matching. The States included in the network would be Kansas, Missouri, Iowa, Nebraska, and Oklahoma. The online inquiries would involve entering identifiers (SSN, perhaps name and birth date), the State to which the inquiry was directed and the data type requested (wages/UI, child support, benefit history, motor vehicle, driver's license, or revenue). The inquiry would then be sent out through the data links established to serve this network and the requested information returned from the target State and displayed on the user's screen. Although the system is still entirely in the planning stage, the technical capabilities to support such a network are already in place, and the outlook for the development of this multistate-matching system appears positive, if not probable. At this point, the main obstacle seems to be the overcoming of bureaucratic inertia, and resolving the minor disagreements that typically arise when States negotiate among themselves.

Table of Contents

DESCRIPTION OF APPLICANT MATCHING IN WYANDOTTE COUNTY

THE FOOD STAMP PROGRAM IN WYANDOTTE COUNTY

The administrative-area consisting of Wyandotte County (Kansas City) is the subject of the local case study in Kansas. The food stamp caseload is 5,228. The office averages 405 applications a month.

The average household size of 2.88 persons (3.00 PA, 2.47 NPA), is slightly larger than the State average of 2.69. At $136 per household, average benefits are slightly higher than the State averages because of the larger household size, although the average recipient benefit of $47 is virtually identical.

The dollar-error rate in Wyandotte County for April-September 1986 was 8.0 percent and the case-error rate 21.7 percent. Preliminary data for October 1986 through March 1987 indicate that the dollar-error rate has fallen to around 4 percent in Wyandotte County, the same rate as in the State as a whole.

Staffing and Organization. The Wayandotte administrative office, in downtown Kansas City, consists of three sections:

- the initial eligibility (or intake) section where staff determine benefit eligibility for all public assistance applicants;
- the AFDC and Food Stamp program ongoing case management section;
- the ongoing case management section for general assistance and medical assistance only. These staff also coordinate employment programs.

The initial eligibility section, which is managed by a chief supervisor, contains three application units and one fraud detention unit. There are five or six eligibility workers, one supervisor, and one clerk in each application unit.

Applicants are assigned to initial-eligibility caseworkers who manage the cases through the application process. Eligible (certified) clients are assigned to case managers in the ongoing units. A typical caseload for an initial

eligibility worker is 20 to 30 cash/medical assistance cases and 15 food stamp applicants. Because of the intensity of effort and short timeframe involved in the certification process, these caseloads are significantly lower than caseloads assigned to ongoing case managers. Ongoing workers manage 205 cash/medical assistance cases and 125 food stamp cases.

COUNTY DATABASES USED TO VERIFY APPLICANT-REPORTED INFORMATION

Workers in Wyandotte County have online access to all the State and Federal databases (except where, as noted, online access is not available at all for the database). In addition, they use county motor vehicle and property record databases.

County Motor Vehicle Data. The motor vehicle database includes all motor vehicles registered by individuals in Wyandotte County (250,000 cars for a population of about 175,000). Each record includes the name and address of the owner and the following information about each car registered in the individual's name: make and model year; title and tag numbers; class of vehicle; registration fee; and pertinent dates, such as title issuance, initial registration, re-registration, and expiration. New data are immediately keyed into the system. Overnight batch jobs actually update the database. The county uses the database as a system of records and to collect revenues.

The motor vehicle database can be searched by tag number, as well as by name, because the database is constructed around records of individual vehicles. This method of inquiry, however, is not particularly useful in certifying applicants for food stamp benefits as it shows all vehicles owned by anyone in the county with the same name.

County Property Records. The property record database contains information on all real estate in Wyandotte County. Each individual's record includes name and address and the following information about each parcel of real estate owned; location and size of property; zoning; purchase history; data property first recorded; assessed value of property; account number and type; tax obligations to county; tax payment history; and due dates for future tax payments.

Table of Contents

The county uses these data, which are entered at the time a transaction is reported and batched overnight, to maintain real estate records and to collect property taxes and related revenues.

The real-estate database can be search by name and address and by property account number. Although the database is actually organized by address, inquiries by name still go reasonably quickly, so this method of accessing the database can be used to gather information on applicants.

COUNTY HARDWARE AND SOFTWARE

Four CENPAY/FPT terminals are located together in a fourth-floor room. In addition, two terminals for the county system and the one terminal for Kansas and Missouri wages/UI access are all located behind a partition in a fourth-floor office.

Kansas is also planning a dramatic increase in accessibility as it moves toward implementation of its CAECSES automated eligibility system. Current plans call for a terminal on the desk of every caseworker and an additional unit terminal to be shared by two clerical support workers providing assistance to caseworkers within their work unit. Concurrent expansion in the number of security codes available is also planned, so that workers will be able to access the wages/UI databases from their own terminals.

Right now, the county databases in Wyandotte County are the only ones for which there is unrestricted access for all workers. Any worker in the office can go to the two terminals that access the county system, log on, and make whatever inquiries they wish.

The terminals used to interface with the FPT/CENPAY systems are IBM 3278s -- standard IBM "dumb" terminals. There are four of these in Wyandotte County. Also in Wyandotte County, a Zenith microcomputer with an IBM keyboard emulator, functioning as a dumb terminal, is used to access the Kansas and Missouri wages/UI databases. (Microcomputers with keyboard emulators are the norm throughout Kansas for accessing these databases.) Finally, there are two additional IBM dumb terminals in the county office that are used to interface with the county computer system.

Table of Contents

The county computer system is based around an IBM 4381-2 mainframe. This mainframe is connected by leased telephone lines to two IBM terminals in the Wyandotte County welfare office. The IBM terminals are standard 3278 and 3276 units with associated controllers.

APPLICATION AND VERIFICATION PROCEDURES

The next section of this case study describes the food stamp application process in one Kansas welfare office, the Wyandotte County office located in downtown Kansas City. Exhibit 1 provides a highly simplifed flowchart of local procedures.

In the Wyandotte County welfare office, case processing for food stamp applications essentially involves four steps:

- Step 1 -- Initial intake,
- Step 2 -- Initial screening,
- Step 3 -- Intake interview and verifications, and
- Step 4 -- Benefit determination.

Most computer matching occurs during steps two and three.

Step 1: Initial Intake. When applicants enter the Wyandotte County office, they are directed to the third-floor reception area. There they receive applications, which they may complete in the office or at home. Completed and signed applications are returned to the receptionist, who stamps in the date of receipt.

Each applicant also completes a summary sheet that is reviewed by the receptionist while the applicant waits. If the applicant appears to need expedited service, an initial eligibility worker immediately interviews the applicant.

All other applicants are given two choices for their interview dates. Usually, applicants are interviewed within two or three days of making application for benefits. Needed verifications are identified during the appointment process.

Table of Contents

EXHIBIT 1: THE FOOD STAMP APPLICATION PROCESS

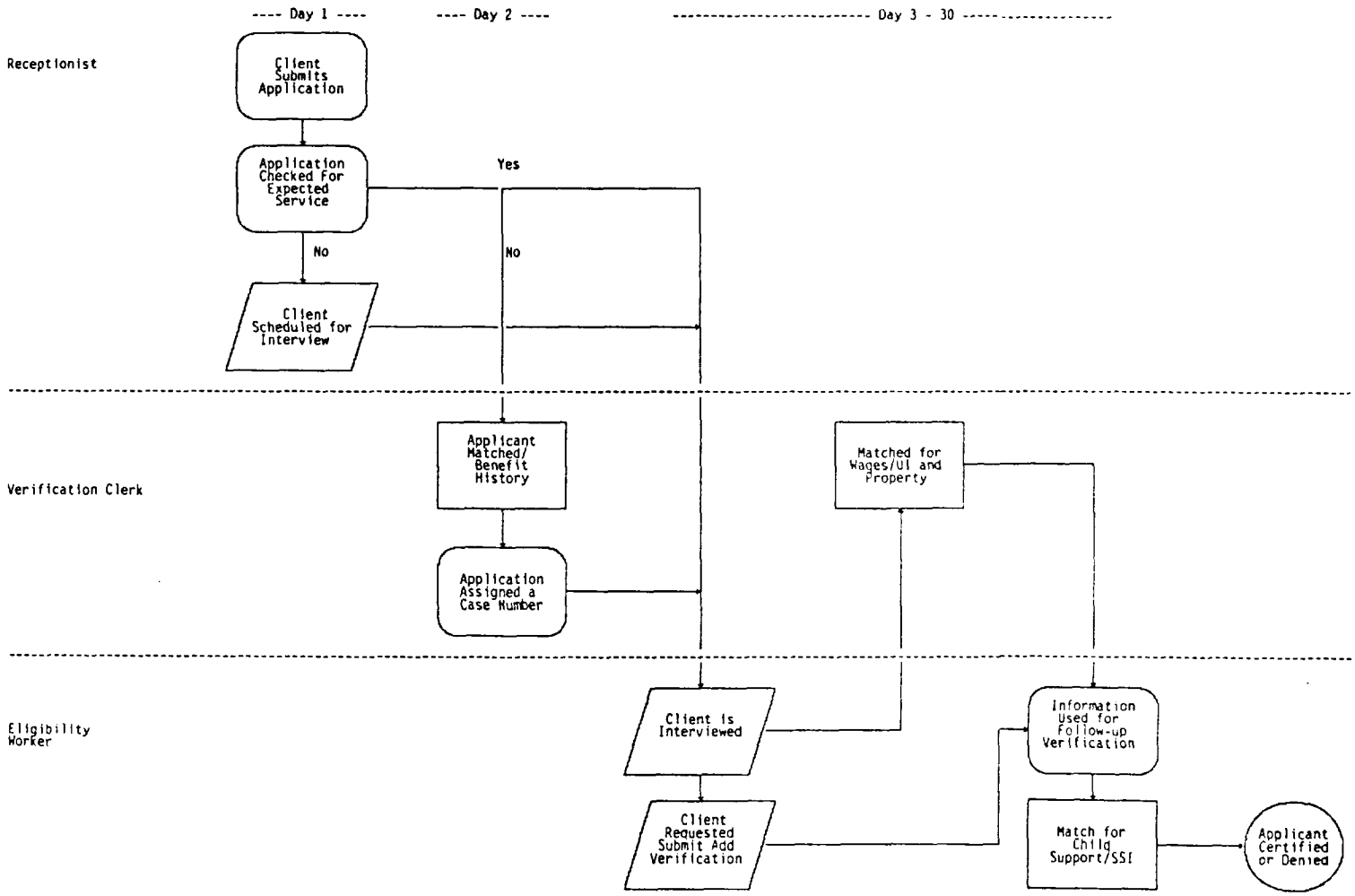

Table of Contents

The applications are collected from the receptionist by a clerk, who logs in client names, dates applications are received, and whether the case was expedited.

Step 2: Initial Screening. The central index unit forwards applications to the data processing unit. Here, verification clerks match client-reported data against the State's two master case record systems. This initial screening is done by means of an "alphasearch" using the applicant's name as well as the names of other household members.

The State's two case management systems are simultaneously accessed during the alphasearch. Both are linked to a master common "dumping ground," which contains basic information about all the cases in each system, including such identifiers as name, date of birth, Social Security number (SSN), case number, and key case information such as status, other case members, and relevant dates. It is these data that are accessed by the alphasearch, not, technically speaking, the FPT and CENPAY databases themselves.

Alphasearch enters the applicant's last name and the first three letters of the first name. The names that appear on the computer screen are then checked with other identifiers [illegible]

matches.

Using CENPAY, cash assistance cases that have closed within the last two years, can be identified. CENPAY also includes, for a particular case, names and other data on all members of the assistance unit. The database does not include denials.

In contrast, the FPT system includes food stamp cases that have been closed or denied during the last six months. It, however, includes data only on the head of household. If information on other case members is needed, a separate hardcopy document known as FPIDT may be consulted on existing cases.

If there is no match in the initial alphasearch, the clerk generally shortens the first name identifier to two letters

fails to provide a valid match, then the clerk may also search the system with some alternative spellings of the last name in an effort to locate the applicant within the database.

This procedure is repeated for each member of the applicant's household because the participation of other household members in benefit programs is relevant to determining eligibility and benefit levels for this applicant.

If the alphasearch indicates that the applicant (or a household member) is known to either system, the computer screen displays the relevant case information including county case number, the person's Social Security Number (SSN), current case status, program(s) for which benefits were provided and benefit amounts. The clerk records the case numbers and attaches the information to the application form. In addition to preventing duplicate benefits, these case numbers are usually re-used to maintain a unique system of client records.

Alphasearch results and applications are returned to the central index office where a clerk manually checks two other sources. The first is a monthly microfiche listing that includes information similar to that accessed by the alphasearch. By scanning the microfiche, the clerk is sometimes able to pick up names that are missed in the identifier-keyed alphasearch.

The second source is a card index system maintained by the county, which indexes all stored files, including all cases closed or denied in the county within the last four years. This source may reveal a case record not known to the CENPAY/FPT systems, because it it contains many cases purged from these systems and some that were never included.

Old case files are attached to applications, and original case numbers are maintained. New case files are attached to the remaining applications, which are also assigned case numbers. Case files are held in the applications units until applicants arrive for their assigned appointments.

Table of Contents

If an applicant is part of an open case in the same program, the following steps are taken to avoid duplicate participation:

- If the case is open within the county, then the application is denied and no further action is taken on the case.

- If the applicant's case is open in cash assistance in another county, that case will simply be transferred to Wyandotte County.

- If the applicant's case is open in food stamps in another county, the food stamp case in the other county will be closed and the application in Wyandotte County treated as a new application.

Step 3: Intake Interview and Verifications. At the intake appointment, the eligibility worker reviews the application with the applicant, allowing the applicant to record their responses in sections that have not been properly completed. The worker also records receipt of verifications. The eligibility worker determines any need for subsequent verification to certify benefit eligibility.

A form requesting the appropriate verification letters is filled out by the eligibility worker and submitted to a clerical unit known as "TAJ" (an abbreviation formed from the first letters of the first names of the clerical workers initially involved in the unit). This form can request computer matches with Kansas and Missouri wages and UI files as well as the Wyandotte County motor vehicles and property records.

A TAJ clerk fills out two forms, one for the wages/UI checks and the other for the motor vehicle/real estate checks. All case members over the age of sixteen are checked for wage or UI history; inquiries are performed on SSNs, not names, for these databases. If there is a hit for any of these data sources, the clerk makes a check on the request form and attaches a hardcopy printout. If the inquiry produces no

information, the clerk notes "NR" for "no record." The clerk usually complete all the Kansas inquiries, then, executes the Missouri inquiries.

When finished with the wage and UI matches, the clerk then proceeds with the motor vehicle and real estate inquiries. These inquiries are to a Wyandotte County database, and are done by name, rather than SSN. All household members sixteen and older and absent parents are screened. Hits are noted, and hardcopy printouts are attached; failure to find information is also indicated.

Usually, the clerks complete all the motor vehicles checks. If the name on which an inquiry is being run shows up on the screen, keystroke accesses information on the individual's car. This information is printed out and attached to the form. Then, clerks do real estate checks, which have two components. The first consists of checking by name all the individuals in the applicant's household to see if they own any real estate in the county. If the name appears on the screen, a keystroke accesses the actual property record for that person, which is then printed out. The second part is an address check, using the address on the form as an identifier. When the address is located by the search, the screen shows the property owner, if that owner is included in the database. A printout is then made of this information -- including those instances where the screen shows no owner for the address. The purpose here is to identify the property owner. This individual or organization can then be contacted to obtain information on the applicant's household composition.

Forms and printouts are returned to eligibility workers, who review these materials to determine further action. For example, if the applicant is shown as receiving wages in the last quarter from a source not mentioned on the application or during the interview, the worker sends out a verification letter to the employer. The letter asks about employment status, dates of employment, and wages received by the applicant.

For UI matches, no followup is needed to verify information about the applicant's current status or income received,

because the UI databases are up-to-date and, being official internal records, constitute their own verification.

If the applicant owns a motor vehicle or real estate that s/he did not report, the worker sends the applicant a letter asking for proof of payment for the motor vehicle or a property deed. The purpose is to verify the applicant's ownership and assess the value of the resource. The eligibility worker sends letters to newly identified landlords, asking for such information as whether the applicant actually resides at the address, rent and utilities specifications, type of housing unit, the number and names of other people residing in the applicant's household, and the employment status of members of the applicant's household.

Eligibility workers follow up if they suspect that child support payments are involved. The worker can, in such cases, check these records in the county computer system, using the same terminals employed for the motor vehicle/real estate inquires.

As noted in the discussion of State and Federal data bases, eligibility workers can initiate TPOs for information on Social Security payments or check a hardcopy printout of data on SSI recipients.

Step 4: Benefit Determination. Once all information and verifications are obtained, a worksheet to calculate eligibility determination is filled out. A data entry sheet is also filled out for each client. Before the data entry sheet is forwarded to processing, a supervisor checks that all needed documentation has been received and that information provided from the computer-matching systems has been properly followed up. Lastly, the supervisor checks the worksheet to verify that the benefit amount awarded to the household is accurately calculated.

After this supervisory review, the data entry sheet is sent to the data-processing department, where clerks input information into the appropriate computer system (CENPAY or FPT). This entry assures continued issuance of the clients benefits.

Table of Contents

THE EFFICACY OF THE APPLICANT-MATCHING SYSTEM IN KANSAS

This section explores the effectiveness of applicant matching in Kansas. First, results from the quantitative cost-benefit part of the study that are particular to Kansas are summarized. Then, the qualitative perceptions of local and State staff on the utility of applicant matching are explored, including the effect on payment error rates and the extent to which it deters client misreporting.

MEASURABLE COSTS AND BENEFITS OF APPLICANT MATCHING

The costs of applicant matching include staff time to both screen cases and followup on whatever discrepant information is discovered through the applicant matching process, as well as charges associated with using the computerized databases. The staff time spent on screening was measured through time motion studies conducted on-site, while followup time was measured through worker time logs associated with each case.

The benefits of applicant matching include reductions in benefit payments based on information obtained from matching, denials of benefits to clients who would have been certified in the absence of matching information and, from these same denials, administrative cost savings from avoiding the administrative costs that would have associated with keeping these cases on the rolls. These benefits were measured by abstracting information from a sample of cases (208 that went through to final certification or denial) on (1) what the applicant originally reported their household situation to be; (2) what household situation the final benefit determination was based on; and (3) whether any of the changes in the client's household situation, between that originally reported by the applicant and that used in final benefit determination were attributable to computer matching. Changes attributable to applicant matching were translated into changes in food stamp, AFDC and Medicaid benefits, and projected over the period of time during which the applicant would have been receiving the overpayments in the absence of the matching information.

Information Obtained from Applicant Matching. Information obtained from applicant matching in Kansas included data on the applicant's current and prior receipt of public assistance benefits, wage history (in both Kansas and Missouri),

Table of Contents

receipt of unemployment benefits (in both Kansas and Missouri) and, in Wyandotte County, data from county records on motor vehicle and real estate ownership. However, while each of these data sources were accessed more or less routinely to match applicants, there was some variation in the frequency of access. The most commonly accessed source was the benefit history records which were accessed 99 percent of the time. This was followed by wage history records, looked at in 86 percent of the cases, real estate records, looked at 85 percent of the time and unemployment benefits and motor vehicle data both looked at in 83 percent of the cases.

Data sources also varied widely in how often accessing the source actually produced information on the applicant -- that is, produced a "hit". The highest level of hits was recorded checking benefit history records, where 64 percent of attempts produced information about the applicant. The next highest was wage history, where 56 percent of attempts produced at least some information pertinent to the applicant.

The rest of the data sources produced hits less than half the time. Motor vehicles data returned information about the client's household in about 41 percent of the cases, while unemployment benefits checks produced hits in a quarter of the cases and real estate checks only 11 percent of the time.

Even where matches were obtained, these hits did not often uncover discrepancies in the applicant-reported information. The proportion of hits that uncovered discrepancies was, at most, near 10 percent, and for several data sources considerably less. The highest level of discrepancy hits was for real estate hits, at 11 percent, while motor vehicle hits uncovered discrepancies 9 percent of the time and UI hits 7 percent of time. Benefit history hits uncovered discrepancies only 1 percent of the time, while wage hits uncovered no discrepancies at all.

Costs of Applicant Matching. The costs incurred obtaining the matching information described above were generally quite low. Total costs for matching the 208 completed cases were only $939.52, or an average of about four and one-half dollars a case.

Table of Contents

Of this total, a little more than one-quarter was accounted for by the costs of accessing the computerized databases -- roughly about 26 cents to screen an individual against a single datbase. The other three-quarters of the cost was due to the staff time involved in screening the cases and following up on the match results.

One important reason why the staff time costs were so low is that screening the cases--that is, performing the actual match on a computer terminal--is not a very time-consuming process. With the exception of benefit history screening, these matches took less than two minutes a case, at a cost of less than 33 cents each.

Similarly, following up on match results did not consume a lot of caseworkers' time, either. This was because so many cases involved little or no followup time at all. Of course, where a match did not produce a hit, there was no followup time involved. And, even where there was a hit, if the match results simply corroborated the applicant-supplied information, the amount of time spent following up was very small.

Benefits of Applicant Matching. Benefits from applicant matching can occur where benefit levels are affected by the results obtained from computer matching, or where denials could be attributed to these results. In Kansas, there were only 6 instances where benefits were affected by discrepancies uncovered through applicant matching, and one of these was a denial.

This produced a modest total savings of $2,134.35. Of this total, easily the largest proportion was due to matching on the motor vehicles database. Savings from this one database alone were almost $1500, or over two-thirds of the total amount. The next largest savings amounts were from screening the UI and real estate files, each of which saved over $300.

Finally, matching on some databases produced extremely small savings or none at all. Matching on benefit history files only saved $13 while wage matching saved nothing at all.

Table of Contents

Relationship of Benefits to Costs. Overall, the benefits of applicant matching in Kansas, while modest, substantially outweighed the costs. The ratio of benefits to costs was 2.27 to 1 and the net savings (savings minus costs) was $1,194.83.

The most effective database, from the standpoint of net savings, was the motor vehicles database. Matching on this database generated a net savings (i.e., savings less costs) of almost $1300. This was followed by matching on the unemployment benefits database, which netted a little under $250 in savings and matching on real estate records where savings after costs were around $65.

Matching on some databases actually lost money. This was true of matching on wage records and on benefit history records, where costs exceeded savings by about $200 in each case. The reason for this is simple: the costs of matching these databases, while low, were tangible and well above zero, while the benefits of the matching were almost non-existent.

In general, though, applicant matching in Kansas appears to be cost-effective. This cost-effectiveness is remarkable in light of how few errors seem to be uncovered through applicant matching. However, even a small number of applicant errors, when translated into a monthly benefit savings, and projected out over a number of months, appear to be more than adequate to outweigh the low costs, and produce a favorable benefit-cost ratio.

STAFF PERCEPTIONS OF APPLICANT MATCHING EFFECTIVENESS

Effect on Payment Error Rates. Over the last few years, the Food Stamp payment error rate in Kansas has gone down drama tically. Although the increased use of applicant matching has coincided with this error-rate decline, it is difficult to ascribe a causal relationship between the two because of all the other factors involved.

In fact, the views of officials tied this error-rate decline mostly to successfully combating earned income errors among recipients, primarily with monthly reporting and batch recipient matching, rather than online inquiries at the time of application. The effects of applicant matching on error-

Table of Contents

rate decline -- particularly the decline in earned-income errors -- were viewed as modest.

While officials were generally very positive about the usefulness of computer matching in general for detecting case errors, they were not as positive about the effectiveness of computer-assisted applicant matching. This was not because they thought the computer matches would not be able to detect relevant errors, if they existed, but rather because there were not that many errors to detect.

This view reflects the general belief that the applicant population that comes in and applies for Food Stamps is actually fairly honest about their situation, at least as far as they themselves understand it. The misreporting of income and so on occurs mostly, these officials believe, after the applicants are already on the rolls and their situation changes. At this point, they frequently do not want to report the change, or do not understand that they must.

Viewing the effects of applicant-matching as modest does not reflect a belief that applicant matching is not working well, but rather a view about the relative prevalence of client-caused application errors susceptible to detection by computer matching. Given more of these errors, applicant matching would have a quantitatively larger effect, but, given the actual situation, the effect is modest.

Deterrence Effects. Generally speaking, officials believed that the deterrence effects of applicant matching were modest. Most applicants who would be scared off by having a caseworker put their name in a computer are probably afraid of the entire application process, and would be unlikely to apply to begin with.

They did believe, however, that at least some applicants were inclined to be more cautious and truthful in their assertions about their personal situation because of the availability of computerized information to caseworkers. No data were available on the extent of this deterrence effect though, and officials did not appear to believe that the numbers of such applicants were very high.

Table of Contents

Effects on Case Processing. The obvious disadvantage of applicant matching is that it can add time and require more staff to perform case processing. Neither State and local officials nor caseworkers appeared to think that the extra time involved was very significant. An administrator in Wyandotte County noted that, despite all the computer-match verifications they did for applicants, the average time required to process a case was only about two weeks from the point of interview completion.

As for the extra staff involved, while some clerical workers' time has to be dedicated to running the computer matches, in the case of Wyandotte County, these workers had been doing other tasks before they were assigned to doing computer inquiries, so there was no actual accretion of staff to do these tasks. It may be the case that the time spent on doing the computer matches is not far different from the time clerical workers formerly devoted to doing these verifications by other means, which might explain why the implementation of applicant matching has not required the addition of new support staff.

Another aspect of the effect of applicant matching on case processing is a savings of applicant's time. This occurs when the computer can provide verification of some aspect of a applicant's income or resources, thereby obviating the necessity for the applicant to locate and bring in the verification themselves. This can be particularly beneficial in the case of elderly applicants for whom physically visiting the office is a substantial burden.

State and local officials and caseworkers all agreed that the most substantial benefit of applicant matching lies in helping caseworkers establish the integrity of their case. Obtaining computerized information on applicants' income and resources helps give caseworker's confidence that they are accurately processing applicant's applications and awarding them the proper amount of benefits.

This computerized information has, in other words, became an important tool for helping caseworkers do their job. It helps them develop a picture of the applicant's situation without inefficient and distracting attempts to obtain the

information on their own. Whether or not the computerized information calls the applicant's story into question, a benefit is derived, officials and caseworkers said, from having as accurate and complete data as possible on the applicant.

Table of Contents

APPENDIX G

THE USE OF COMPUTER-ASSISTED VERIFICATIONS OF APPLICANT-REPORTED INFORMATION IN ST. LOUIS COUNTY, MISSOURI

For further information contact:

Missouri Department of Social Services
Division of Family Services
3545 Lindell Blvd.
St. Louis City, MO 63103-1077

Table of Contents

ACKNOWLEDGEMENTS

This case study of applicant matching in Missouri was made possible through the kind assistance of many people. The authors, John Agliato and Gail Simpson, gratefully acknowledge the help of Janet Fishman who give freely of her time during our site visit to St. Louis; Susan Rolls and Karen Basil who provided their expertise to our study in the State program office; Phil Morgan and Edgar Bailey who informed us similarly at the central computer facility; the many eligibility workers in the St. Louis City Office who helped us measure the costs of conducting applicant matching; and Bernice Sundberg and Jeanne Pankey who abstracted data from the applicant case records. We would also like to thank: Melody Bacha (the Project Officer), John Hitchcock, Edward Speshock and Jill Herndon of the Food and Nutrition Service who provided useful comments and suggestions throughout the course of this project; Mike Puma who directed the study for Abt Associates Inc; and, Dr. Daniel Finnegan who directed the subcontract for Quality Planning Corporation. Finally, the report was produced by Marsha Strother.

Table of Contents

APPLICANT MATCHING IN MISSOURI

This study of applicant matching is based on three information sources: interviews with State officials and with staff in the St. Louis City public assistance office (conducted during a five-day site visit in July 1987); the abstraction of data from the application records of all individuals applying for food stamps at the St. Louis City Office during a period of four weeks; and, worker time logs and time-motion studies.

SUMMARY

Operational Description. St. Louis residents may apply for public assistance every weekday at the local public assistance office. Applicants complete pre-application forms which provide basic identifying information (e.g., name, Social Security number, date of birth). These forms are given to receptionists who conduct preliminary online screening (called "clearing") to determine whether or not each applicant is known to the Missouri case management system as a current or previous public assistance recipient. Data obtained from these preliminary screens are printed out and attached to the pre-application formed. This procedure is aimed at preventing duplicate participation and, if an applicant is a previous client, provides useful information on the applicant and his/her household.

While waiting to be seen by intake interviewers, applicants complete the full application form. During these interviews, intake staff review the application form, obtain information on other household members (for the purpose of computer matching), and inform applicants of needed verification documents. After the interview, intake interviewers compile case files which are then sent to intake investigators.

Clerical staff then match, or clear, each individual in the household against Missouri's case management database. At this same time, each case is "registered," that is entered into Missouri's automated case management system. Information obtained is printed out and attached to the application clearing/registration requests. About a week after applications are submitted, these materials (called clearing packets) are also sent to the assigned intake investigator.

Table of Contents

Intake investigators, working with the case files and clearing packets (as well as with reports from investigators who may complete home visits), determine the applicant's final eligibility for food stamp benefits. These staff screen applicants against Federal data bases (BENDEX and SDX) and also search the Claims and Restitution (CARS) database to check for prior overpayments that are still outstanding as well as the database maintained by the Division of Child Support Enforcement. They may also obtain third-party verifications (from banks, for example). Often, intake investigators review the case history screens as well as the wage and UI screens. Applicants either mail or deliver verification documents to the investigators who may, if needed, request additional documentation from the applicant. In general, it is the responsibility of the applicant to resolve any discrepancies discovered through computer matching.

Incidence of Detected Discrepancies. For the purposes of this study, information was obtained on 308 applications that resulted either in a determination of eligibility for food stamp benefits or in the denial of benefits. Of these 308 cases, benefit levels for only 14 were affected by information from computer matching, 3 of which were denied eligibility altogether.

Costs of Applicant Matching. The costs of applicant matching include staff labor for screening cases and following up on discrepant information as well as computer costs. Total costs for computer matching for the 308 cases in the Missouri sample were $977.65 or about $3.18 per application.

Labor costs for computer matching are very low because the time required to screen applications is quite minimal, ranging from about a minute per data source to only a few seconds. Automated system costs are also low because the necessary database inquiry transactions are relatively simple. Finally, for most applicants the match data are not inconsistent with the information reported by the applicant. Where discrepancies are found, the responsibility for resolving such problems is placed on the individual applicant.

Table of Contents

Savings from Applicant Matching. The 14 discrepant cases resulted in overall savings of $5,564.15 in reduced or eliminated food stamp payments and in avoided administrative costs. Just about 45 percent of these savings can be attributed to matches made with the wage history database. Most other savings (about $1,000) came from checking Unemployment Insurance (UI) benefit records.

For each $1.00 spent on applicant matching, Missouri saved $5.69. Thus, in Missouri applicant matching can be considered a very effective error-reduction strategy.

Other Benefits of Applicant Matching. State and local agency staff believe that computer matching has had some effect on reducing the overall payment error rate by preventing overpayment errors and duplicate issuances. In particular, staff indicated that they believe computer matching has helped to reduce the portion of the payment error rate attributed to earned income.

In addition, staff reported that when clients know that information they provide will be verified by computer matching, they are likely to provide more accurate data. Finally, automating routine processing tasks has freed professional staff for more and longer client contact and has increased caseworker job satisfaction.

ORGANIZATION OF CASE STUDY

This case study is divided into three parts: a discussion of aspects of applicant matching that are common throughout the State of Missouri including the management and characteristics of the Food Stamp Program, the development of computer matching, a description of the databases and computer systems used, and future development plans; a description of those aspects of applicant matching that are specific to the St. Louis City Office (the subject of our site visit) including the organization and characteristics of the Food Stamp Program, application and verification procedures, and county-level databases and computer systems; and, a discussion of the costs and benefits of applicant matching as measured in St. Louis.

Table of Contents

STATE DESCRIPTION

Public assistance programs in Missouri are described below. In addition, this section provides information on State and Federal databases used in Missouri's applicant-matching system, a description of the system's hardware and software, and a review of the system's historical development.

THE FOOD STAMP PROGRAM IN MISSOURI

Food Stamp Program Administration and Organization. The Division of Family Services (DFS), a part of the Missouri Department of Social Services (DOSS), administers the State's income maintenance programs -- food stamps, AFDC (both basic

Child Support Enforcement, Medical Services, and Youth Services. DFS also oversees operations for three other support programs: general relief; supplemental aid to the blind; and nursing care.

DFS consists of three program sections, two of which offer services to specific populations. Children's Services

Table of Contents

appears to be seasonal fluctuation in which the caseload reaches an annual low during the summer months and peaks on the first of February.

Food Stamp Payment Error Rates. Missouri's payment error rate has steadily decreased between 1982 and 1987. The reported error rate was 10.5 percent for the second quarter of 1982. Between October 1986 and March 1987, the error rate was 4.1 percent. About half of the erroneous payments in the Missouri Food Stamp Program are related to earned income.

SYSTEM DEVELOPMENT

Creation of the Automated Case Management System. Since the early 1970's, the Missouri Division of Family Services has had a food stamp case management system with some electronic data processing functions. The system now in place has evolved from this original system adding new features and functions to accommodate changing State and Federal regulations.

In 1979, Missouri began a development effort to revamp the State's welfare management information systems. This effort was partly a response to the growing size and and complexity of the Missouri Food Stamp program (particularly the expanded availability and modified program requirements in the Food Stamp Act of 1977). The decision to develop a different system also responded to the increasing integration of Missouri's AFDC and Food Stamp Programs. Finally, Missouri's data processing system had not kept pace with many programmatic changes, which resulted in excessive client waiting times, overcrowded waiting rooms and the inability to prevent clients from receiving benefits in several counties.

Part of the challenge of restructuring the automated system was the need to effectively interface with existing wage, Unemployment Insurance (UI), and other databases to accommodate changing Federal regulations related to computer matching. While wage and UI information, from the Division of Employment Security (DES), had been available at terminals since 1975 and vital statistics since 1976, one goal of the redeveloped system was to integrate these and other data sources so that eligibility workers could effectively use this information during the application process.

Table of Contents

In July 1980, DFS implemented a screening component which provided local staff with direct online access to information on wage and UI benefits. Then, in 1983, the SDX and BENDEX subsystems were added and modified to include data on all case members as well as data on the household head. Also in 1983, Missouri made available three new terminal screens to clear clients and inquire about income maintenance and food stamp participation. In 1985, other additions included: the capability to comply with Federal regulations concerning IEVS; the capability to issue expedited and mailed benefits protection against unauthorized use of terminals; and twenty-four-hour turnaround on batch processing. Missouri also expanded its recipient matching efforts to include bank matches, matches with lottery winners, matches against winners of racetrack purses, and monthly matches against death records.

Problems Encountered. The main problem identified by State staff was funding; the acquisition of funds was complicated by delays and limitations imposed by the State legislature on hiring additional staff and paying existing staff. Missouri also found that Federal support was insufficient and ended too soon. There was also staff resistance to changes in work patterns including the use of computer terminals. Some personnel believed that the new data and methods were of questionable utility or reliability, and others doubted that their workload would decrease as the State claimed. In addition, staff believed that having training for the entire State in the central office was inconvenient.

Privacy and confidentiality also presented some problems in the early phases of development. Infractions of data security guidelines conveyed a negative impression to outside data providers of the ability of DFS to handle sensitive data. However, violations of uniform data security guidelines came under control as staff were trained in appropriate procedures and disciplined for breaches.

Development Costs. Missouri's expenditure records do not permit disaggregation of development costs specifically for the portion of their existing data processing system that is used for applicant matching. State staff were, however, able to provide costs for three of the most closely related

Table of Contents

components: the DES interface; IEVS wage, IRS, SDX, and BENDEX matches; and, the case/client data record and food stamp/income maintenance interface. The costs of these components total $127,724.60. Personnel costs accounted for 79 percent of the total, while non-personnel costs comprised 21 percent of the total development budget.

STATE DATABASES USED TO VERIFY APPLICANT-REPORTED INFORMATION

Public Assistance Benefit Records. DOSS maintains databases on current and recent clients, with a retention period of thirteen months. That is, thirteen months after a recipient leaves the program, household data are purged from the database. Only client identifying information (e.g., case number, SSN, name) is retained. The database is updated online from local offices when applications are registered, when monthly reports are received, at recertification, and when any other changes are reported. Updated information is available online within one day of input.

Initial online access to the DOSS database is through the clearance (SCLR) menu; the individual's name is used for online searches. If the individual is not identified, the user may request a soundex search using alternative spellings. Other identifiers that can be used include SSN, race, gender, date of birth, and Department Client Number (DCN). If an applicant is recognized by the system, there are a variety of screens that can be accessed to provide detailed information about individual recipients or the assistance units (e.g., the food stamp case) to which they belong. The data available to eligibility workers include: individual identifying information such as name, gender, SSN, date of birth and race; current and prior case status; address; case action information such as assigned caseworker, certification period, payment history, and case actions; and, detailed financial information by individual and case such as earned and unearned income by sources, assets, and expenses.

Eligibility workers are enthusiastic about this system because they can immediately obtain useful information. They no longer have to wait for paper case records to initiate food stamp applications. Data are current and readily accessible, and data quality is high because DFS is directly responsible for maintaining the database.

Table of Contents

In addition to online access, an address microfiche (containing benefit payment data) is printed each month and distributed to St. Louis City, St. Louis County, and Kansas City/Jackson County. This file is checked when there is concern that duplicate benefits have been authorized for a household.

Missouri Wage and Unemployment Insurance Records. In Missouri, the Division of Employment Security (DES) maintains State wage and Unemployment Insurance (UI) benefit information on its mainframe computer. The full employment security interface between DES and DFS involves unemployment benefits, job training, job placement registration, and employment reporting or wage information. All employers must report to DES the wages paid each quarter. Reports are due by the end of the first month of the next quarter. DES posts approximately 10 percent of these wages in that first month and 45 percent in each of the next two months. These data become available during the first week of the second month following the match quarter. UI data, on the other hand, are posted weekly.

DFS uses both tape batch matches and online interfaces with DES. In the batch update, the data processing component (DDP) forwards quarterly tape files of all active AFDC and food stamp household members, including data on disqualifications, to the DES mainframe for wage and UI matching. In the online interface, eligibility workers directly access the DES mainframe data through summary screens that pass through the DDP mainframe. This access is used for applicant matching.

Vital Statistics Records. Data on births and deaths from the Missouri Department of Health's Vital Records are available online at the same terminals that are used to access the DOSS case management data through a link with their mainframe computer. The identifiers for birth verifications include name, gender, race, and date of birth.

Death verification identifiers are SSN, name, or death certificate number. The system returns date and cause of death, SSN, father's last name, date filed, death certificate

number, State of death, date of birth, and sex. Each month, death records are also batch-matched against recipient rolls; all matches are returned to eligibility workers for follow-up.

Because hospitals and medical practitioners usually submit batches of forms to the Department of Health, there is often a delay in entering data from hospitals and practitioners onto the vital records system. A delay of one to two weeks is an inconvenience to caseworkers seeking confirmation of births to change AFDC or food stamp allotments. Otherwise, these data are considered reliable and easily available.

Claims and Restitution (CARS). CARS data are used jointly by the Division of Legal Services and the Division of Investigations (both within DOSS) for the recoupment of outstanding claims from current beneficiaries. The database is maintained on the same mainframe computer used for the DOSS client records, so eligibility workers have online access to these data. At some point, the State would like to install an interface between CARS and the DES database.

Primary identifiers are: client's name, SSN, date of birth, DCN, and case number. The data returned on the CARS screens include: program for which benefits are being recouped; total amount owed; date claim was established; claim balance; billing status; agreements regarding method of payment; frequency of payment and amount; demand letter information; claim status; and receipt transactions.

Division of Child Support Enforcement. The Division of Child Support Enforcement has developed an online system using the same mainframe computer on which the DOSS client records are maintained. An online interface permits local office access to a subset of child support data at the same terminals used to obtain DOSS case management data. The screens indicate whether child support is being collected in the name of an AFDC child and if it is larger than the grant amount to the AFDC family.

Primary identifiers are client name, DCN, and case number. The data returned on the screens include: child's name, case number, type, and status; client address; absent parent's

name; support and pass-through amounts; and legal referral information. These data prove useful in cases where absent parents can be located and support payments can be collected through the Child Support Enforcement system.

FEDERAL DATABASES USED TO VERIFY APPLICANT-REPORTED INFORMATION

SSI Benefit Records (SDX). Missouri uses SDX data from the Social Security Administration (SSA) to verify SSI benefits. SSA generates monthly tapes which are sent to the Division of Data Processing (DDP). The tapes include eligibility payment and demographic data on all SSI recipients in the State. DDP prepares a microfiche of these data. Eligibility workers use the microfiche to check applicant-reported data. Update tapes, containing changes in existing SSI benefits, are sent to the State about once a week. Hard copies are made of the data on these tapes and are also sent to local offices. According to local staff, the updates are more useful for recipients than for applicants.

The primary identifiers are SSN and SSI Claim Number. The SDX printout contains case number, name, gender, race, SSN, claim number, record identification, address, worker number, transaction code indicating the action taken, master file code indicating recipient type, pay code status, date of birth, SSI payment and eligibility amounts, net earned and unearned income amounts, date of SSI application, and various codes for denials, living arrangements, and essential person.

Third-Party Query (TPQ). In Missouri, as in most other States, Third-Party Queries (TPQ) are used to verify Social Security and SSI benefits when applicants are unable to provide verification of benefits. Primary identifiers are SSN or Claim Number, client name, and DFS office code.

An optical scan card is completed by the eligibility worker and sent to the local SSA office. The card is scanned within one day, and a printed response is generated the next day. This printout is sent to the requesting local welfare office. Turnaround time is between two and three days, so this system can be used to verify data for both applicants and recipients.

Table of Contents

The response includes claim status information and claim number, SSN, Master Beneficiary Record data (including name, date of birth and death, and entitlement), payment status and net monthly benefit, special payment information, twelve-month benefit history, Medicare data, address, and net current benefits.

These data are current, correct, and useful for applicants reporting Social Security benefits. However, this information is not entered into the State case management database and are generally used for applicant matching only.

Social Security Administration -- Enumeration and Validation. In order to validate Social Security numbers DDP submits a quarterly tape to the Social Security Administration. This tape contains SSN, name, date of birth, gender, and DCN of all individuals in the DOSS case management database. When discrepancies are identified using data from the tape returned by SSA, verification flags appear in the system to indicate the need for follow-up by eligibility workers.

COMPUTER HARDWARE AND SOFTWARE

Central Computer. The Missouri central system will be certified as a Family Assistance Management Information System (FAMIS) when the system is completely operational. The central system is an IBM 3090 Model 180 with 24 megabytes of real memory and 40 megabytes of virtual memory. Because this unit will be running close to full capacity at peak operating periods, It is expected that the unit will be replaced by December 1988 with an IBM 3090 Model 200.

Communications. An IBM 3725 Communications Controller manages the data flow between terminals and the central processor via leased telephone lines, linking, by high speed modem, remote field site controllers of the 3270 SNA/SDLC, systems network architecture/synchronous datalink control type. The local controllers connect "dumb" IBM 3270 type terminals, or PCs emulating 3270s, on the desks of clerical and eligibility staff through coaxial cable. Microcomputers are supported by SNA/SDLC (Systems Network Architecture/Synchronous Data Link Control) attachment through 3270 controllers to the mainframe. Local hard copies are provided by IBM 3287 desktop impact printers of connected to the same 3270 controllers.

Table of Contents

Project leaders at program county offices also have mainframe access through the Distributed Office Support System/370 (DISOSS). It assists managers, professionals, secretaries, and support personnel to communicate, retrieve, and control job-related information, allowing information exchange by electronic mail and central filing.

The current data communications monitor is IBM's Customer Information Control System (CICS/OS/VS) which supports the interface between end-users and the teleprocessing method, Advanced Communication Function/Virtual Telecommunications Access Method (ACF/VTAM). VTAM provides a transparent network for the direct transmission of data between terminals in session and the central computer, as well as management and monitoring functions.

Software and Operating Systems. Missouri's operating system is IBM's MVS/XA strategic virtual storage system, designed to perform system control programming in large online, interactive computer networks. The early design phases of the current system stipulated that the development must be completed in ANS COBOL (American National Standard Common Business Oriented Language). As the system and technology have evolved, however, intensive data management services were moved into a more flexible fourth generation data management language, Cullinet's Integrated Data Management System (IDMS). Various other software languages or packages are also installed on the central mainframe and are available to local offices. Some, like SAS or FORTRAN, allow statistical manipulation of data; others provide programming or maintenance utilities.

Security. Terminal access is requested for each individual caseworker and approved by a local county teleprocessing coordinator. When approved, access is granted and a copy of the authorization form is sent to the central office in Jefferson City. A new request must be submitted when workers change jobs or offices or are no longer employed.

Separate and distinct levels of security are programmed to secure sensitive data areas. For example, the online systems have four such levels for transactions. One of these levels

Table of Contents

must be assigned to each food stamp employee using the terminals. Level 1 is used only for workers who use the inquiry screens and not the update or entry screens. Level 2 is used by staff key entering data other than income maintenance or food stamp update transactions. Level 3 is used by staff keying income maintenance or food stamp update transactions. Level 4 is used by a few highly responsible staff who need access to all income maintenance and food stamp screens and transactions. The food stamp data processing section maintains a tracking system which records workers' access to and their activities on the automated databases to control unauthorized use of terminals.

Missouri also uses the CICS software security package, Guardian, to protect its online CICS system. CICS is a release of On-Line Software International, Inc. File access restrictions vary by user, transaction or program, value of the data, kind of access requested, terminal, and time of day. The terminal is automatically locked after a number of failed attempts to log on. Transaction and program usage is controlled by those terminals where transactions or programs can be entered, by those users who can use transactions or programs, by when a transaction or program can be used, and by what values can be entered.

Physical access at the county office level is controlled by placing terminals in secured monitored areas, by limiting access to online databases to working hours, by physical lock-and-key security systems at county and central facilities, and, in some locations, by security guard services. Terminal identifications and passwords further limit access to sensitive databases. For example, the Data Center in the St. Louis City Office is located on the building's second floor, which has no windows, is vapor sealed, and has its own air conditioning system. The Center is protected by a Halon extinguishing system activated by sensors in the raised floor that are also connected to the local fire department. The center is equipped with a storage vault that is electronically and mechanically guarded and controlled.

FUTURE DEVELOPMENT PLANS

Missouri's Division of Child Support Enforcement is participating in an Interstate Research and Demonstration Project to investigate the potential for successfully locating absent

Table of Contents

parents and reducing duplication of benefits across five states. Iowa, Kansas, Nebraska and Oklahoma will use Missouri as an online data hub for this project. These States will share data regarding wages, UI benefits, motor vehicles, driver's licenses, income taxes, and AFDC and food stamps benefits. Access is currently limited to Child Support Enforcement offices. If funding continues, the system interface may be increased to include DFS program offices. Also, State staff are interested in expanding contacts to include Tennessee, Illinois, and Arkansas. An implementation date for a DFS interface is not now available.

Also, under development is the SSA wages interface, the Benefit Earnings Exchange Report System (BEERS). State staff believe that these data are two years out of date when received and that the State wage data systems are likely to contain more current data. However, a potential benefit of this interface is identifying applicants with out-of-State income. The projected completion date for BEERS is December 1987.

Missouri is now developing a database to hold IRS data and is creating follow-up mechanisms to complete its IRS interface during 1988. State staff are currently exploring a targeting methodology to screen IRS data. IRS data could help identify unearned income (such as interest) that might otherwise be unreported. The design will likely follow the standard exchange tape format used by Federal agencies and States. Missouri also projects completion of the State Alien Verification for Entitlement (SAVE) System by October 1988.

Finally, to enhance its database security, Missouri DDP is considering adding IBM's Resource Access Control Facility (RACF) to the security system for non-CICS systems. RACF provides user identification and verification by checking user identification and passwords. It also has access authorization checking for protected resources. It logs and reports access events by class of resource, individual resource, and user. RACF also gives immediate notification of violations at dedicated security terminals.

Table of Contents

APPLICANT MATCHING IN ST. LOUIS

THE LOCAL FOOD STAMP PROGRAM

The local office described in this case study is located in St. Louis. This office is part of the St. Louis administrative area which also includes the St. Louis County public assistance office.

The St. Louis City Office processes 21 percent of the Missouri food stamp caseload, serving a caseload of more than 84,000 food stamp recipients in over 30,000 households. In April 1987, St. Louis City received 4,237 food stamp applications/reapplications.

Staffing and Organization. The St. Louis Area director manages both the city and county public assistance offices. The St. Louis City Office has three case management units. Units I and II share the management of ongoing AFDC cases. In addition, Unit I manages ongoing non-public assistance (NPA) food stamp cases, while Unit II is responsible for the ongoing caseload in all other public assistance (PA) programs, including General Relief, Medical Assistance, Nursing Care, Supplemental Assistance for the Blind, and Blind Pension. Unit III is responsible for intake for all programs.

Unit I has a total staff of 158, including: 18 income maintenance supervisors, 109 income-maintenance caseworkers, 3 clerks, and 28 clerk-typists. Unit II has 165 staff members, including: 20 income-maintenance supervisors, 113 income-maintenance caseworkers, 3 clerks, and 29 clerk-typists.

Unit III, with a staff of 154, processes all new applicants for food stamps and other forms of public assistance. Applicants already receiving public assistance submit applications for additional program services to their ongoing workers. Case study observations of applicant-matching activity were confined to Unit III where the vast majority of intake activity occurs. For example, during June 1987, a relatively slow month in the annual cycle, the unit processed 800 AFDC and 1,480 food stamp applications.

Unit III's staff consists of 14 income-maintenance supervisors, 109 income-maintenance caseworkers, one clerk, and 30 clerk-typists. There is a high degree of job specialization, with each job classification encompassing a number of specialties. The job requirements for the 109 caseworkers include four years of college or two years of college and experience working with the public. Of the fourteen supervisors, two oversee intake interviewers, two supervise the auxiliary units, one is responsible for claims and restitution, and nine oversee intake investigators.

Eighteen intake interviewers conduct intake interviews when applications are submitted; they do not determine eligibility and cannot approve or deny applications. They may, however, conduct full-scale inquiries to obtain all the information needed for certification.

Intake interviewers complete worksheets summarizing the interviews and transmit case files to the workers who will determine the eligibility.

Fifty-six intake investigators determine benefit eligibility for public assistance applicants. Eligibility determination is based primarily on paper records, including the intake interview reports, applicant-provided documentation, other verifications, computer match data, and review of existing case files. Four of these workers process only expedited food stamp cases. Seven specialize in NPA food stamp cases. The remaining forty-five workers process PA and NPA applications.

Of the remaining 36 workers, two caseworkers visit and take applications from homebound clients; three conduct public assistance intake interviews in hospitals or clinics; ten review and write up claims and restitutions actions against applicants and recipients referred from other units; ten process applications for individuals in nursing homes, boarding houses, rehabilitation centers, and other institutions; three conduct home visits to determine eligibility for pending applications; and the remaining eight workers specialize in General Assistance-Unborn, including certifications, case maintenance, and AFDC applications.

Table of Contents

The 31 clerks create and maintain case records, type letters, set up expedited food stamps, and secure and combine case records. Clerk-typists clear and register applications and print match data from the automated case management system.

COUNTY DATABASES USED TO VERIFY APPLICANT-REPORTED INFORMATION

The St. Louis City Office uses all the State and federal databases described earlier in this case study. Neither the local office nor the administrative area maintains separate county or municipal databases for case management or for applicant/recipient matching. All counties in Missouri have access to all of the databases used for applicant matching.

COUNTY HARDWARE AND SOFTWARE

Because the St. Louis administrative area does not maintain county-specific databases, no additional; computer equipment is needed beyond that described earlier.

APPLICATION AND VERIFICATION PROCEDURES

There are four steps in the food stamp intake process in the St. Louis City Office:

- Step 1 -- Initial intake,
- Step 2 -- Intake interview,
- Step 3 -- Verification and investigation, and
- Step 4 -- Benefit determination.

In addition, there is an optional step of issuing expedited food stamps. These steps, illustrated in Exhibit 2, are described below.

Step 1: Initial Intake. The St. Louis City Office officially opens at 8 am, but the doors are opened at 7:30am, at which time people are usually waiting in line. Applicants are given pre-application forms and numbers to indicate their positions in line. They wait until called by one of two receptionists working at terminals at the reception desk. A receptionist reviews each pre-application, asks questions to determine the programs for which the applicant should apply,

Table of Contents

EXHIBIT 2: THE FOOD STAMP APPLICATION PROCESS

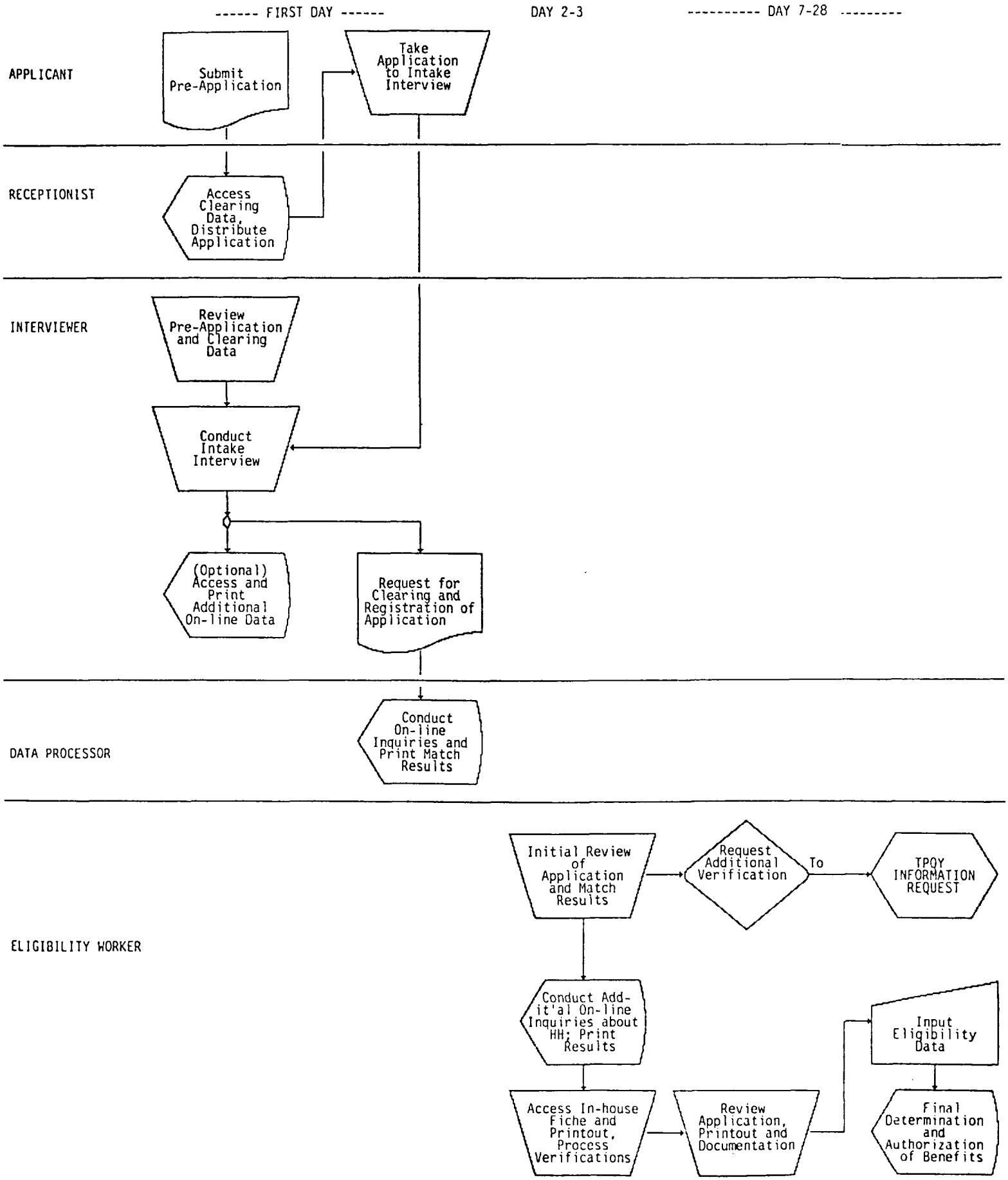

Table of Contents

and gives the applicant the appropriate application forms -- one for NPA and another for PA food stamps. The single-page application is accompanied by the appropriate booklet in which eligibility information is recorded.

The receptionist also conducts a preliminary online screening

Table of Contents

Though it is not commonly done, the interviewer can access online data and other informational sources during the course of the interview particularly to follow up on questions that may arise about the applicant or other household members. On the relatively rare occasions that such information is obtained, the interviewer leaves the applicant in the interview cubicle for a few minutes. Staff said that the most commonly accessed sources are online program participation data, online wages/UI data, and the address microfiche. Intake interviewers share a terminal and fiche reader in the intake area.

Applicants sign their applications and are given cards with the names and phone numbers of the intake investigators who will receive the required documentation, process the case, and serve as contact persons until certification is complete.

Intake interviewers do not determine eligibility. In cases where they have doubts about an applicant meeting the standard of need, they may work through a preliminary food stamp budget to determine whether there is reason to pursue the application. But, these workers cannot reject applications.

Interviewers record and summarize the results of each interview on worksheets. The case file, containing the pre-application, eligibility booklet, registration form, any computer printouts, applicant-supplied documentation, and worksheets, is sent to an investigations supervisor. Simultaneously, a request for "application clearing and registration," along with photocopies of identifying information, is forwarded to the clerical staff who conduct computer matches.

Nine supervisors oversee the distribution and disposition of cases to the intake investigators. Cases are assigned by the receptionist to one of fifty-six intake investigators on a rotating basis. Each case remains with the same investigator until a final disposition is made.

Step 3: Verifications and Investigations. At the same time the case file goes to the investigator, the request to

"register the application" is forwarded to the clerical section of Unit III. Four clerks, each with a terminal and printer, clear and register applications.

Each individual household member is cleared (or screened) through the system by either verifying an existing, or assigning a new, Department Client Number (DCN). If the applicant provided a DCN, or if the clearing immediately produced a match for an individual in the household, then clearing is complete for that individual. Several screens are printed and made part of the case file: one provides a summary of program participation and current status in the food stamp or other income maintenance programs; another shows identifying information on all other household members associated with the case; and, finally, a screen is printed showing a summary of benefit payments.

If the individual is not recognized by the system on the first try, searches continue on name, SSN, and date of birth. The screens are set up to help workers scan lists of people with similar identifying information if a match is not immediately achieved. Alternate spellings, transposed or erroneously transcribed SSNs or dates of birth can all be compensated for in the search process.

During the clearing/registration process, location of existing casefiles are noted. Requests are sent to other local offices or to the closed-file archives to retrieve these files. It may be up to two weeks, however, before they are available to case investigators.

Registration occurs when the clerk feels certain that all individuals have been cleared and that all relevant case data has been printed. If an individual is not known to the system, then a DCN is assigned. Registration initiates new cases into the system or updates pre-existing cases for case-tracking purposes. Furthermore, registration allows the applicant household to be included in routine recipient matches conducted by DOSS. The clerk forwards the clearing packet to the investigator approximately a week after the application is submitted.

Table of Contents

The application case file, minus the clearing packet, arrives on the investigator's desk no later than the end of the day after the application is submitted. Work on the case begins almost immediately to maximize the time available to gather any additional documents needed for processing.

The investigator accesses wage and UI data through the direct link with the Division of Economic Security (DES) data files. The Income Maintenance Employment Security screen displays data on any household member who has received wages or UI benefits, whether or not she/he has a prior case history with public assistance programs. If a match is found, a copy of the screen is printed and incorporated into the case file.

The investigator also reads the case to identify additional verifications and initiates correspondence to obtain the information. (Applicants are asked to sign a number of information-request releases during their interviews.) Bank-balance requests are sent to banks if the applicant indicates cash assets. Requests for verification from all employers and on all categories of unearned income including veterans' benefits and retirement plans are also sent. A third-party query (TPQ) card is sent to the local Social Security office to obtain information on Social Security and SSI benefits through overnight matches. Preparing correspondence requesting documentation requires 30 to 60 minutes per application. The investigator also uses the in-house address and SDX microfiche to investigate questions generated by the application.

An investigator usually reviews case history screens to compare household composition with that of prior case history as well as Vital Statistics screens on births and deaths to confirm any changes in household composition. CARS is also reviewed but is considered to be less useful because a CARS flag merely indicates that the case was at one time or another considered for claims action.

Information from any of these databases affects followup activity. The investigator may call the applicant to ask for additional documentation. The applicant may be asked to

Table of Contents

provide duplicates of verification (such as SSN cards and birth certificates) s/he submitted for a prior case, if there is a delay in obtaining existing case records.

During the interval between the initial case review when verification queries are sent and case disposition, the investigator accumulates documents into the case file as they arrive. Depending on the details of the case, the file contains: the clearing packet; the existing case record (if one is available); any responses to third-party inquiries; additional information from the applicant; correspondence with banks, employers, and schools; matches triggered by case registration; and, the home visit report, which is widely used by workers in this office if household circumstances seem questionable.

In general, the investigator determines eligibility for food stamp based on the paper case record without further contact with the applicant. The two exceptions are when the investigator calls the applicant for additional verification and when the applicant delivers verification documents by hand. When the latter happens, the investigator is called, and s/he can make a point of meeting and talking with the applicant at that time. There appear to be significant differences in practice among investigators. One claimed to see at least 90 percent of the applicants she handled, while others seemed to see very few.

Step 4: Benefit Determination. Around the twenty-eighth day, as the 30-day case disposition deadline approaches, the investigator evaluates the casefile to ensure that documentation has been provided. If critical information is missing by the thirtieth day, the investigator sends a second-request notice. If the deficiency has not been corrected in another 30 days, the case is denied for lack of proper documentation.

Investigators complete the determination of eligibility at computer terminals. Three investigators share one, terminal. Computers are located in banks at investigators desks. Workers log onto the system with security codes used for tracking computer use.

Table of Contents

The case record is accessed online, budget data are entered, and the food stamp allotment is automatically calculated by the system. Staff report that the online edit checks have reduced the computational errors that used to be a major problem. The investigator prints copies of the budget for the case file and for the applicant. Finally, for applicants who qualify for benefits, the investigator authorizes the automatic mailing of authorization-to-purchase (ATP) cards that are exchanged for food stamp coupons at authorized distributors.

Expedited Service. The two clerks at the reception desk screen applicants to determine who might be eligible for expedited food stamps. These applications are flagged with an Expedited Services Screening Form by intake interviewers. The intake section supervisors take these applications upstairs several times a day for immediate clearing and registration. Case records are then given to one of the four investigators specializing in expedited food stamp applications. If these investigators have sufficient grounds, based on the applications and the accompanying documentation, they certify these applicants and authorize food stamps for a full certification period. More commonly, investigators authorize benefits for one month on a "postponed" verification status and require the applicants to provide verification in order to be certified and receive additional benefits.

Table of Contents

THE EFFICACY OF THE APPLICANT MATCHING SYSTEM IN MISSOURI

This section discusses the effectiveness of applicant matching in Missouri. First, results of a quantitative cost-benefit analysis are summarized. Then, the qualitative perceptions of local and State staff on the utility of applicant matching are reported and explored, including effects on payment error rates and the extent to which matching deters client misreporting.

Measurable Costs and Benefits of Applicant Matching. The costs of applicant matching include staff time to both screen cases and to follow-up on whatever discrepant information is discovered through the applicant matching process. These costs also include the costs of using computerized databases. The staff time spent on screening was measured through time motion studies conducted on-site, while followup time was measured through worker time logs associated with individual cases. Estimates of computer charges were derived from conversations with appropriate personnel.

The benefits of applicant matching include reductions in food stamp, AFDC and Medicaid benefit payments based on information obtained from matching, denials of benefits to clients who would have been certified in the absence of matching information and, from these same denials, administrative cost savings from avoiding the administrative costs that would have been spent keeping these cases on the rolls. These benefits were measured by abstracting information from a sample of cases (308 that went through to final certification or denial) on: (1) the applicant's report of his/her household situation; (2) the household situation on which the final benefit determination was based; and (3) whether any identified changes that could be attributed to computer matching. Changes attributable to applicant matching were translated into changes in food stamp AFDC and Medicaid benefits and projected over the period of time during which the applicant would have received the overpayments.

Information Obtained from Applicant Matching. Information obtained from applicant matching in Missouri included data on the applicant's current and prior receipt of benefits within

the Food Stamp Program and other programs such as AFDC; data on the applicant's recent wage history; data on receipt of unemployment benefits, data on Social Security benefits (both regular Title II and SSI); and, data from local bank records.

There was some variation in the frequency with which data sources were accessed. Benefit history records were accessed for 99 of the applications in this sample. Wage and unemployment benefits records were each accessed for 96 percent of the applications, while regular Social Security benefits were checked for 89 percent of the applications, with SSI benefits at 86 percent.

There was also wide variation in the frequency with which the various data sources actually produced information on the applicant -- that is, produced a "hit." The highest level of hits occurred benefit history records -- 99 percent of these matches produced information about the applicant. The next highest were wage records, where 83 percent of attempts produced at least some information pertinent to the applicant. The remaining data sources produced hits for less than half the cases. Unemployment benefits data returned information about the applicant's household in about 36 percent of the cases, while Social Security benefits checks produced hits in a little over one-fifth of the cases (for both regular and SSI benefits).

Often, these matches did not uncover discrepancies in the applicant-reported information. The proportion of hits uncovering discrepancies was generally less than 10 percent. For example, the level of discrepancy hits for wage records was 7 percent, while UI hits uncovered discrepancies for 5 percent of the cases and SSI benefits hits for only 3 percent.

Costs of Applicant Matching. The costs of applicant matching were generally low. Total costs for matching the 308 completed cases were only $977.65, or about $3.18 per application.

Of this total, a little less than half represents the cost of accessing the computerized databases. The other half of the cost can be attributed to staff time to screen cases and follow up results.

Table of Contents

Labor costs for computer matching are very low because the time required to screen applications is quite minimal, ranging from about a minute per data source to only a few seconds. Automated system costs are also low because the necessary database inquiry transactions are relatively simple. Finally, for most applicants the match data are not inconsistent with the information reported by the applicant. Where discrepancies are found, the responsibility for resolving such problems is placed on the individual applicant.

Benefits of Applicant Matching. Savings from applicant matching can occur where program benefit levels are affected by the results obtained from computer matching, or where applicants are denied eligibility altogether. In Missouri, there were 14 instances where benefit levels were affected by discrepancies uncovered through applicant matching; of these, three were denials.

This result produced a total savings of $5,564.15. Of this total, the largest proportion was due to matching on the wage history database. Savings from this one database alone were almost $2,500, or just under 45 percent of the total saving. Other major savings were from checking UI benefits records (almost $1,000). Matching on other databases produced much smaller savings or none at all. For example, matching on regular Social Security benefits records saved about $162, while SSI matching failed to generate any savings.

Relationship of Benefits to Costs. Overall, the benefits of applicant matching in Missouri substantially outweighed the costs. The ratio of benefits to costs was 5.69 to 1 (for each dollar spent on matching, $5.69 was saved) and the net savings (savings minus costs) was $4,586.50.

The most effective database, from the standpoint of net savings, is that of employer-reported wages. Matching on these data generated a net savings of almost $2,300, over half of the total net savings. Matching on UI records, generated a net savings of a little over $800.

Table of Contents

Matching on some databases actually lost money. Matching on SSI records, resulted in net loss of about $100. Although matching costs were very low, they were above zero, while there were no benefits associated with this matching.

In general, applicant matching in Missouri appears to be very cost-effective. This cost-effectiveness is somewhat surprising in light of how few benefit-impacting errors seem to be uncovered through applicant matching. However, even a small number of these errors, when translated into monthly benefit savings and projected over time, seem to outweigh the low costs and to produce a favorable benefit-cost ratio.

STAFF PERCEPTIONS OF APPLICANT-MATCHING EFFECTIVENESS

Effect on Payment Error Rates. Staff in Missouri believe that computer matching has made a contribution to reducing the food stamp payment error rate. However, this judgment does not make a sharp distinction between applicant matching and recipient matching. Both types of matching are viewed as beneficial, with no particular belief held for the efficacy of applicant matching. Further, the lack of evidence to measure the effects of either applicant matching or recipient matching on reducing the State's error rate, combined with the many other recent administrative changes have led staff to the opinion that the recent decline in the State's error rate cannot be solely attributed to computer matching.

Nevertheless, staff think that computer matching for applicants has contributed to the reduced error rate by preventing overpayment errors and duplicate issuance and has also reduced errors for some components of the overall error rate. For example, staff believe that screening against public assistance records and wage/UI data have contributed substantially to decreasing the earned income error rate from 3.5 to 2.5 percent.

Deterrence Effects. Staff in the St. Louis City Office believe that applicant matching has deterred client misreporting. They believe that because clients know that a computer will be used to check the information they report, at least some applicants provide more accurate information. The example used to illustrate this claim is the implementation of wage matching. According to staff, after this matching was initiated, some clients simply did not return to the food stamp office, and caseloads decreased as a result.

Table of Contents

Effects on Case Processing. Staff believe that the institution of applicant matching has had a positive effect on case processing. Automated processing has increased the time available for interviewing by reducing the time needed to verify information. In addition, streamlining and automating repetitive tasks has increased job satisfaction among caseworkers.

Table of Contents

Table of Contents

APPENDIX H

THE USE OF COMPUTER-ASSISTED VERIFICATIONS OF APPLICANT-REPORTED INFORMATION IN HUDSON COUNTY, NEW JERSEY

For further information contact:

Hudson County Department of
Health and Social Services
100 Newkirk Street
Jersey City, NJ 07306

Table of Contents

ACKNOWLEDGEMENTS

This case study of applicant matching in New Jersey was made possible with the kind assistance of many people. The author, Alan Werner, gratefully acknowledges the help of: Ruy Teixeira, who accompanied me on the site visit; Mary Ann Maguire, Jim Mazzoucolo, Ellen DeCorso, Mike Greene, Joe Kamrad and many others too numerous to mention, who gave freely of their time during our visit to Jersey City and Trenton; the many eligibility workers in the Hudson County welfare office who helped us to measure the costs of conducting applicant matching; and Maureen Beeks who abstracted data from the applicant case records. I would also like to thank Melody Bacha (the Project Officer), John Hitchcock, Edward Speshock and Jill Herndon of the Food and Nutrition Service who provided useful comments and suggestions throughout the course of this project and Michael Puma who directed the study for Abt Associates Inc. Finally, the report was produced by Marsha Strother.

Table of Contents

APPLICANT MATCHING IN NEW JERSEY

This study of applicant matching is based on three types of information: interviews with State officials and local staff from the Hudson County welfare offices conducted during a five day site visit in July 1987; the abstraction of data from the application records of all individuals applying for food stamps in Hudson County during a period of three weeks; and, worker time logs and time motion studies.

SUMMARY

Operational Description. Applicants seeking public assistance in Hudson County must appear in person during the business day Monday through Friday. PA applicants go to the main welfare building, while NPA applicants go to a separate building. Initially, the receptionist simply asks them a few questions to check the kind of assistance for which they are applying. They are then screened by a clerk or caseworker who collects only limited information on each individual for whom benefits are being sought (e.g., name, Social Security number, income).

This information is recorded on an index card and is used by the screener to match each household member against FAMIS, the State's online integrated case management system. This check, done for essentially all applicants, determines if anyone in the household is currently receiving, or has received in the past, food stamps, AFDC or Medicaid benefits anywhere in the State. This ensures against duplicate participation and, if the applicant was a previous beneficiary, provides prior case information that can assist eligibility workers to make a correct determination regarding the recent application.

Intake interviews generally take place on the same day. For PA cases, the interview is preceded by and, for NPA cases, followed by an additional computer check. This verification is a screening of all individuals 16 years of age or older against records of employer-reported wages and Unemployment Insurance (UI) benefits. To do this, the caseworker must telephone the Fraud Unit, where a clerical performs the match on a terminal located in that unit.

Table of Contents

During the interview, the intake worker fills out the application form with the client. The application form collects detailed information about each individual related to eligibility for benefits including sources and amounts of earned and unearned income, resources, and expenses. Information provided by the applicant is reviewed, as well as, for PA cases, any discrepancies uncovered through the computer matches (e.g., unreported wages). Generally speaking, the burden of resolving such discrepancies is placed upon the applicant; however, eligibility workers sometimes conduct independent verifications such as contacting employers. Final eligibility determination is made by a separate new-cases worker for PA cases and by the same caseworker who did the intake interview for NPA cases.

Incidence of Detected Discrepancies. Of the 359 applications that went to final determination or denial, only 8 had a discrepancy that was detected through applicant matching and which affected the household's benefits; four of these eight were outright denials.

Costs of Applicant Matching. The cost of conducting applicant matching consists of the labor needed to screen client-reported information, the associated computer costs, and the cost of resolving any discrepancies that are detected. For the 359 applications in our sample, the total cost of applicant matching amounted to only $971 -- an average of less than $3 per application.

There are three reasons why the costs are so low: the time required to screen an application on the computer is only a few minutes; computing costs are generally small for such simple transactions; and, the number of discrepancies detected is relatively small, and for the most part, the burden of resolving them is placed on the applicant.

Savings From Applicant Matching. Even though only eight cases were found to have benefit changes, these cases generated about $2,798 in savings from reduced transfer payments (i.e., food stamps, AFDC and Medicaid) and avoided administrative costs. About 90 percent of these savings were a result of the match against the benefit history records with the balance coming from the wage screening.
Combining the savings and costs produces a benefit cost ratio

Table of Contents

of 2.9, i.e., for each $1 spent on applicant matching almost $3 is saved. Clearly, applicant matching is cost effective despite the low incidence of detected discrepancies. The costs are very low and the benefit savings associated with the small number of errors is large when projected over the time period during which the overpayments would be expected to be paid in the absence of applicant matching.

Other Benefits of Applicant Matching. In addition to the quantitative benefits noted above, State and local staff pointed out a number of other important benefits attributable to applicant matching: the presence of a computer terminal during the client interview leads to more careful reporting of their circumstances; clients are deterred from misreporting because they don't know how much information caseworkers have access to; and, the applicant-matching system provides caseworkers with specific information that allows them to gauge the degree to which applicant-reported information, in general, needs to be investigated for that household.

ORGANIZATION OF CASE STUDY

This case study is divided into three parts: a discussion of aspects of applicant matching that are common throughout the State of New Jersey including the management and characteristics of the Food Stamp Program, the development of computer matching, a description of the databases and computer systems used, and future development plans; a description of those aspects of applicant matching that are specific to Hudson County (the subject of our site visit) including the organization and characteristics of the Food Stamp Program in Hudson County, application and verification procedures, and county-level databases and computer systems; and, a discussion of the costs and benefits of applicant matching as measured in Hudson County.

Table of Contents

STATE DESCRIPTION

THE FOOD STAMP PROGRAM IN NEW JERSEY

Food Stamp Program Administration and Management. The Food Stamp Program in New Jersey is supervised by the State Division of Public Welfare (SDPW) and administered locally by the twenty-one counties. The SDPW is a division of the New Jersey Department of Human Services (DHS), which oversees the operations of all human services agencies, including Education, Mental Health, Developmental Disabilities, Veterans Services, Youth and Family Services, Medical Assistance, Services for the Blind, and Public Welfare.

In New Jersey, cash assistance is available to low-income persons through the AFDC, SSI, General Assistance (GA), and Emergency Assistance (EA) programs. New Jersey offers the basic AFDC program for one-parent, low-income families with children (AFDC-C), as well as the optional federal AFDC unemployed-parent program, which provides assistance to two-parent families whose income and resources are low due to involuntary under- or unemployment of principal wage earners (AFDC-UP). For two-parent families who meet all other AFDC-UP requirements, New Jersey offers the AFDC-N program, which is entirely State (75 percent) and county (25 percent) supported.

The Food Stamp Program in New Jersey is state-supervised and county-administered. SDPW's supervisory role includes establishing uniform policies for each program and claiming federal reimbursements when and where appropriate. In federal fiscal year 1986, SDPW claimed almost $59 million in administrative costs for the Food Stamp Program.

SDPW maintains a number of administrative units that oversee various aspects of the county-administered operations. The Bureau of Integrity Control investigates program and employee fraud and abuse which includes designing and managing both the applicant- and recipient-matching systems for New Jersey's public assistance programs.

In addition, SDPW houses Fiscal and Quality Control units as well as Management and Administrative Services and Systems Analysis and Development (data processing). The Bureau of Local Operations supervises and evaluates local welfare offices. Finally, SDWP includes several program units:

Table of Contents

Table of Contents

for the FAMIS system began in July 1981. By May 1982, the design and development team had sent out system specifications for review to each of the County Divisions of Public Welfare. During this period of systems design and review, the team also began to develop programs for the new system. By October 1983, the FAMIS development team had received and dealt with almost 300 individual comments from the County Welfare Departments.

Testing for the new system began in late 1983. At first, various components of the system were tested and corrected and reprogrammed as necessary. By December 1985, the entire system was internally tested as a whole. Beginning in February 1986, the design and development team implemented an "emulated pilot test" of the FAMIS system. This consisted of reentering actual transactions from two county offices and comparing the test with results in the field. Although the test used two weeks of historical data, it actually took about six weeks to perform since some additional correction and reprogramming had to take place. By May 1986, the system was ready for pilot testing in the two counties used for the emulated pilot, Burlington and Mercer Counties. At first, the FAMIS system was run in parallel with the old CODES system. This was done by using the FAMIS system as the front-end entry for both systems, but then running the data through both systems and comparing the results. By August, both counties were converted entirely to the FAMIS system. Over the next 6-7 months, the other counties in the State were also converted. Personnel in the county offices were trained on the new system for two weeks approximately two or three months prior to conversion. The training was developed and done by the Bureau of Training and Staff Development of the New Jersey Division of Welfare.

From the point of view of applicant-matching systems -- narrowly defined as those functions that allow the matching of applicant-supplied information with an established automated database -- the process of developing CODES into a FAMIS-certified system did not involve a significant addition to the design. This is because the FIND function used for applicant matching in New Jersey had been part of the CODES system since its inception.

Table of Contents

Development of Computer Matching. The development of the DOL online system for UI benefits and quarterly wages clearly has a greater significance for applicant matching in New Jersey than the development of a FAMIS-certified automated welfare file. Beginning in the late 1970s, the New Jersey Division of Welfare started matching with information on the DOL files. At first, the DOL information matched by the Division of Welfare concerned only UI benefits; New Jersey was not at the time a wage-reporting State. In addition, the match was not conducted online, but was done by batching requests for UI information from the County welfare agencies and sending them to DOL.

As the Division of Welfare management became increasingly concerned about the AFDC and Food Stamp Program payment error rates in the late 1970s they began to explore ways to gain access to data on an individual's income. Because, as noted above, New Jersey was not a wage-reporting State, they approached the State Department of Taxation for information on income. The Department of Taxation was resistant to allowing access to its files, however, and the Division of Welfare introduced legislation to make New Jersey a wage-reporting State in order to gain access to wage data through the DOL. In 1980 the wage reporting law was passed and the DOL began to collect quarterly wage data on workers covered by UI benefits. The next year, 1981, the Division of Welfare began to perform quarterly tape-to-tape matches with the DOL wage information.

The history of the online applicant match with DOL files is more recent. At first the DOL system had capacity for online access only to UI data. In 1980, facing layoffs, the DOL gave the Division of Welfare one terminal for online access to UI data. In 1981, the county welfare agency started to call the State Division of Welfare with requests for UI information.

In 1984, the DOL began to file quarterly wage information online. Shortly thereafter, the Division of Welfare began to take routine calls from the county welfare agencies for applicant matching on both the UI quarterly wage files. In 1986, at first as an experiment, the DOL gave terminals to two high caseload counties, Essex and Hudson counties.

Table of Contents

In addition to performing applicant matching for the county agencies that do not have their own DOL terminals, the Division of Welfare uses their online access to DOL files to aid other Division programs and other State agencies. For example, the DOL system is sometimes used to help the Child Support Enforcement Unit (CSEU) locate absent parents. In addition, the State Probation Department sometimes requests help from the Division in locating individuals.

Problems Encountered. The major problem encountered in the development of applicant-matching in New Jersey was establishing the legislative authority to collect and allow access to State quarterly wage information. This involved the Division of Welfare in the development of legislation to make New Jersey a wage-reporting State. In addition it required complicated negotiations with the DOL in working out where the burden of labor and responsibility for various match functions were to rest. Currently, the federal DOL is pressuring the United States Department of Health and Human Services (HHS) to assume some of the costs of wage-reporting in the States. If HHS does assume some of these costs, a portion will be passed on to the relevant State welfare agencies.

Another problem with the DOL system concerns the way in which wage data are organized. The DOL system maintains wage data records by Social Security number. According to management at the Division of Welfare, this sometimes causes inaccuracies in the amount of wages reported, as mistakes in SSNs lead to mistakes in updating wage files. Presently, these mistakes are resolved at the county welfare office, which must contact employers to confirm the amounts listed by DOL. Division of Welfare managers felt that this problem could be easily avoided if DOL would organize their files by more than just the SSN, for example, by name and SSN, or if the DOL could check each file to make sure that the SSN reported for each quarterly amount corresponds with the associated name.

Development Costs. The cost incurred by New Jersey in the process of developing their FAMIS-certified case management system has totaled $30 million since 1981. However, it is not possible to specifically attribute any portion of these costs to the development of applicant-matching per se since the parts of the CODES system that are used to match applicants were developed for many other purposes as well.

Table of Contents

Costs of developing the online match to DOL, which is more specifically relevant to applicant matching are, unfortunately, also not available. However, given the nature of the system that pre-dated the online match, those costs probably amounted to little more than the price of the (4) terminals and the communications links to the State Department of Public Welfare offices in Hudson and Essex Counties.

FUTURE DEVELOPMENT PLANS

The Division of Welfare is currently negotiating with DOL for permission to access both the last complete quarter and the new quarterly file as it is being created. Welfare officials believe that this will allow them access to current information about an applicant's employment.

The Division of Welfare is also currently attempting to gain online access to the DMV file of registered vehicles in order to check information about applicant household assets. Currently, inquiries to the DMV about household vehicles must be made in writing. Furthermore, the DMV files are organized by name and license number, rather than by Social Security number; this would make an online match more difficult. The caseworker would have to determine which of the many individuals with the same name is the applicant.

Currently, the Division of Welfare is negotiating with Pennsylvania and New York State to crossmatch each State's welfare files with employer-reported wage data. In addition, the Division has recently experimented with an AFDC tape-to-tape match between the caseload in Camden, New Jersey and Philadelphia to check for the provision of duplicate benefits (these are neighboring cities).

There is currently no comprehensive automated file of General Assistance recipients in New Jersey, because the GA Program is administered by individual cities and towns. The Division of Welfare is currently in the planning stage of such a system that would be available for applicant-matching purposes. Presently, the Division conducts a quarterly match of AFDC recipients with town-specific data on GA recipients.

Table of Contents

STATE DATABASES USED TO VERIFY APPLICANT-REPORTED INFORMATION

Public Assistance Benefit Records. New Jersey's on-line (FAMIS) system, which contains both inquiry and update functions, encompasses information on individuals (in open and closed cases) known to the system as of November 1986. FAMIS does not contain information about General Assistance cases but does have an interface capability with the Medicaid Management Information System.

Workers in New Jersey's local offices have on-line inquiry access to FAMIS. Only staff with data entry responsibilities have on-line access for data input. The FAMIS screens used for applicant matching in the Food Stamp Program are "Find" and "Alpha X." The FIND screen permits identification of the applicant's household in the system and provides: name; county of service; date of birth; gender; race; programs for which the case is receiving benefits; a person code (individual's "position" in case); and Social Security number.

The Alpha X screen contains all of the information found in the Find screen plus:

- degree of match ("sound alike") between information used to identify the individual to FAMIS and the data in the FAMIS automated file;
- whether the case is active or archived on the system;
- case number for each case in which the applicant participated;
- supervisor's code for each of these cases; and
- AFDC and food stamp case status.

If the Find or Alpha X matches indicate that the applicant or any member of the applicant's household is known to FAMIS, then the system will also contain the data that were entered from these cases' original application forms. These data include: AFDC and food stamp case information on sanctions and replacement ATPs; food stamp and AFDC case history; Medicaid interface; AFDC work registration status; and, demographic information on all case members.

Table of Contents

The Find file is accessed by name, date of birth, and Social Security number, either individually or in combination. Also, because the FAMIS has a soundex feature, matches can be done with varying degrees of exactness. The combination of name and date of birth is commonly used to narrow down the possible matches on the FAMIS system.

Data on the FAMIS system are generally current because new information is directly input by staff in county public assistance offices. The system is updated as data are entered. Occasionally, there are delays in data entry because case workers do not immediately forward input documents for data entry.

DOL Wage and Unemployment Benefit Records. The New Jersey Department of Labor (DOL) maintains an automated database on wages and Unemployment Insurance (UI) benefits paid to State residents. A few large offices in New Jersey have dedicated terminals and workers who perform matches on the DOL database. In most New Jersey counties, workers must call SDPW where two staff persons screen food stamp applicants using the wage and UI databases.

Quarterly wage data are organized in two different files. One contains the wages, weeks of work, and employer identification number for each job held in a given quarter. The other contains the names and addresses of reporting employers, linked to unique employer identification numbers.

The data contained in the quarterly wage files are updated by the State DOL on a quarterly basis. Updated files are usually available two months after the close of the quarter to which they apply. Even though the latest quarter may be two months old, the data entered may continue to change because employers are late submitting information, which, in turn, is late in being entered in the files. Thus, the online quarterly files may be more up-to-date than the tapes of quarterly wage files which are routinely used for batch matches.

The UI data are contained in UI Claims Inquiry Files and include the following information on individuals: whether individual has applied for UI; whether individual currently

Table of Contents

receiving UI; amount of the latest weekly UI check; history of payments under current claim, number of weekly payments remaining in individual's UI account; and the employer against whom the claim was made.

The data contained in the UI Claims Inquiry Files are current and updated on a weekly basis by local DOL offices. Because UI is processed at the county level, data entry clerks can easily update the UI files, which reflect immediately these on-line updates.

The identifier used to access both quarterly wage and UI data is the Social Security number. No other identifier is typically used in matching activities.

These data are also used for batch matches against records of public assistance recipients and applicants. The wage batch matches are conducted quarterly for all recipients and bi-weekly for applicants and newly certified recipients. UI batch matches are conducted monthly for all recipients and bi-weekly for applicants and newly certified recipients.

FEDERAL DATABASES USED TO VERIFY APPLICANT-REPORTED INFORMATION

BEERS and IRS 1099 Records. These data sources are matched on a monthly basis to verify records of public assistance applicants and newly certified recipients. Information on applicants is not typically received in time to be used in the certification process. The entire caseload is also matched against these data sources on a yearly basis.

COMPUTER HARDWARE AND SOFTWARE

Central Computer. DHS maintains the FAMIS system, and performs all other data processing activities, on a Honeywell DPS-88 mainframe computer. In addition, a network of minicomputers serve as data processing intermediaries between the local welfare offices and this central mainframe. These minicomputers are used for data entry of source documents and transmission to the host computer in Trenton, where the data are processed and used to update the master files. DOL, on the other hand, has its own mainframe, an IBM 370, on which the wage/UI data reside.

Communications. Network access is through "dumb" 3270-type Incoterm terminals and front-end controllers. Printouts are obtained in the local offices by desk-top impact printers connected to these same 3270 controllers.

Table of Contents

The Honeywell mainframe communicates over leased lines using the DM IV TP protocol. The DOL IBM computer also communicates over leased lines using the standard IBM CICS-XA telecommunications protocol. Both protocols support the interface between applications programs and the teleprocessing method, Virtual Telecommunications Access Method (VTAM). VTAM provides for the direct transmission of data between terminals in session and the central computer, as well as management and monitoring functions.

Software and Operating System. The FAMIS System operates within a GCOS environment on the Honeywell mainframe; the DOL Computer System, on the other hand, uses the standard Multiple Virtual Storage operating system in Extended Architecture (MVS/XA), which provides system control in large online interactive computer networks. The language used to program both the FAMIS system and the DOL computer is COBOL. This covers all the applications relevant to applicant matching.

Security. Security for the FAMIS system is maintained in two ways. First, terminals used by caseworkers for file inquiries can only be accessed by individual passwords. These passwords only allow the workers to make inquiries, they are not permitted to add or change existing records. The FAMIS database can only be updated by the Document Control Unit (DCU). In the DCU, a second level of online security is maintained. Each terminal has a specific password known only to the worker, the unit supervisor, and the head of the DCU.

In addition, the updating process for files is organized on a batch basis. Each terminal operator gets cases assigned by batch and can only work on that batch of cases. Once that batch is completed, the system is closed to that terminal and operator until another batch entry has been cleared. In this way each batch can be traced to a given terminal operator or his/her supervisor.

Security for the DOL database is maintained in four ways. First, the terminals used by the New Jersey Department of Human Services for online inquiries have no update capabilities. Second, the number of terminals given to other State agencies by DOL is severely restricted. The Division

Table of Contents

of Welfare, for example, only has four terminals. Third, the DOL terminal used in Hudson County is in a secure location where entrance requires permission and is monitored through a sign-in sheet. Finally, the clericals who access those data have to use a password to enter the system and make inquiries.

Table of Contents

DESCRIPTION OF APPLICANT MATCHING IN HUDSON COUNTY

THE FOOD STAMP PROGRAM IN HUDSON COUNTY

The Food Stamp Program in New Jersey is administered by the twenty-one county Divisions of Welfare. The county program described in this case study is the Hudson County Division of Welfare (HCDW), which is located in two adjacent office buildings in Jersey City, the County seat and principal city of Hudson County. HCDW is a subdivision of the Hudson County Department of Health and Human Services, which administers all public health and social services programs. In addition to the Food Stamp Program, the HCDW administers the AFDC, Medicaid, and Child Support Enforcement programs. The General Assistance program in New Jersey is administered directly by each of the State's cities and towns.

Hudson County, with a food stamp caseload of 21,393 households (more than 50,000 individuals) has one of New Jersey's largest caseloads. A majority (59 percent) of Hudson's April 1987 caseload is public assistance (PA) households. The average PA household benefit ($164.68) in Hudson County is 4 percent larger than the State average. The average NPA household benefit for April 1987 was 3 percent lower than the State average.

The payment error rate in Hudson County has decreased dramatically since 1981. In the second and third quarters of fiscal 1981, the State-reported error rate (percentage of food stamp benefits to ineligible households and overpayments to eligible households, combined) for Hudson County was 20.2 percent, while the State error rate for the same time period was 8.4 percent. By the second quarter of fiscal 1986, the State-reported payment error rate for Hudson County had decreased to 4.6 percent, while the comparable rate for the State was 6.2 percent.

Staffing and Organization. The Hudson County Department of Welfare operates the Food Stamp Program through a series of specialized units staffed by workers assigned specific functional and/or programmatic responsibilities.

NPA food stamp applications and cases are handled by an administratively separate unit located in a building next door to the main welfare building. Within the NPA unit, there are three functionally distinct worker types: receptionists/screeners; new case or "validation" workers;

Table of Contents

and recertification workers. Public assistance (PA) food stamp applications are handled by as many as four different types of workers: receptionists; screeners; intake workers; and new case, or "validation", workers. Once a PA case has been certified, it is then maintained by the redetermination unit, just as a certified NPA case gets turned over to a recertification worker.

The Hudson County welfare office also has special program units. For example, the Working Poor unit administers all AFDC-F and AFDC-UP cases. Similarly, the Refugee Resettlement Program is administered by a separate unit.

For PA food stamp cases, intake units have nine workers for each supervisor, while new-case units have five and redetermination units six workers per supervisor. The supervisor/worker ratios for the NPA office are similar, with six workers per supervisor in both new-cases and recertification units.

Caseloads also vary by program and functional responsibility. In the PA food stamp office, new-cases workers handle 18 to 22 applications a month. Caseloads for PA redetermination workers are assigned by unit, with each unit of 6 workers responsible for about 1,500 cases or about 10 percent of the PA caseload (including AFDC cases not receiving food stamps). In the NPA food stamp office, new-cases workers process some 60 applications each month, while each recertification unit of six workers is responsible for about 1,200 cases.

There are two other administrative sections in the Hudson County welfare office where staff have substantial responsibilities for applicant- and recipient-matching in the Food Stamp Program. The Investigations Unit, which is located in the basement of the building housing the NPA Food Stamp Program, performs all online matches with the New Jersey Department of Labor Unemployment Insurance (UI) and quarterly wage files. For recipient matching, the Investigations Unit is responsible for receiving, organizing, distributing, and monitoring matching "hits."

The second administrative unit of interest is the Verification of Income and Monitoring System, or VIMS, Unit. Staff in the VIMS unit followup on and resolve

Table of Contents

discrepancies between client-reported information and data obtained by the Investigations Unit.

COUNTY DATABASES USED TO VERIFY APPLICANT-REPORTED INFORMATION

Workers in the Hudson County office have online access to information on the FAMIS database, as well as to State wage and UI data. There were no additional county-level databases used for applicant matching in Hudson County.

COUNTY HARDWARE AND SOFTWARE

Terminals for inquiries to the FAMIS system are shared by case workers. There is one terminal for every three or four workers in the office. Accessibility to DOL terminals, on the other hand, is very limited. Only one DOL terminal can be used for inquiries, located in the Fraud Unit. Workers must telephone a clerk in the Fraud Unit with their inquiries.

APPLICATION AND VERIFICATION PROCEDURES

Exhibit 1 displays a simplified version of the Food Stamp Program application process in the Hudson County welfare office. There are three basic steps in this process:

- Step 1 -- Reception and screening interview,
- Step 2 -- Intake interview, and
- Step 3 -- Final eligibility determination.

Step 1: Reception and Screening Interview. The Hudson County welfare office is located in two adjacent office buildings on the periphery of downtown Jersey City. NPA food stamp cases are administered in one building, while the second building houses all other welfare programs. There are some minor differences (noted below) in the application process for PA and NPA households.

Most food stamp applicants report first to the main welfare building which is open for business from 8:30am to 4:15pm each day. Applicants enter a large reception area where a receptionist obtains applicant names and brief summary information to determine whether an applicant is currently

Table of Contents

EXHIBIT 1: THE FOOD STAMP APPLICATION PROCESS

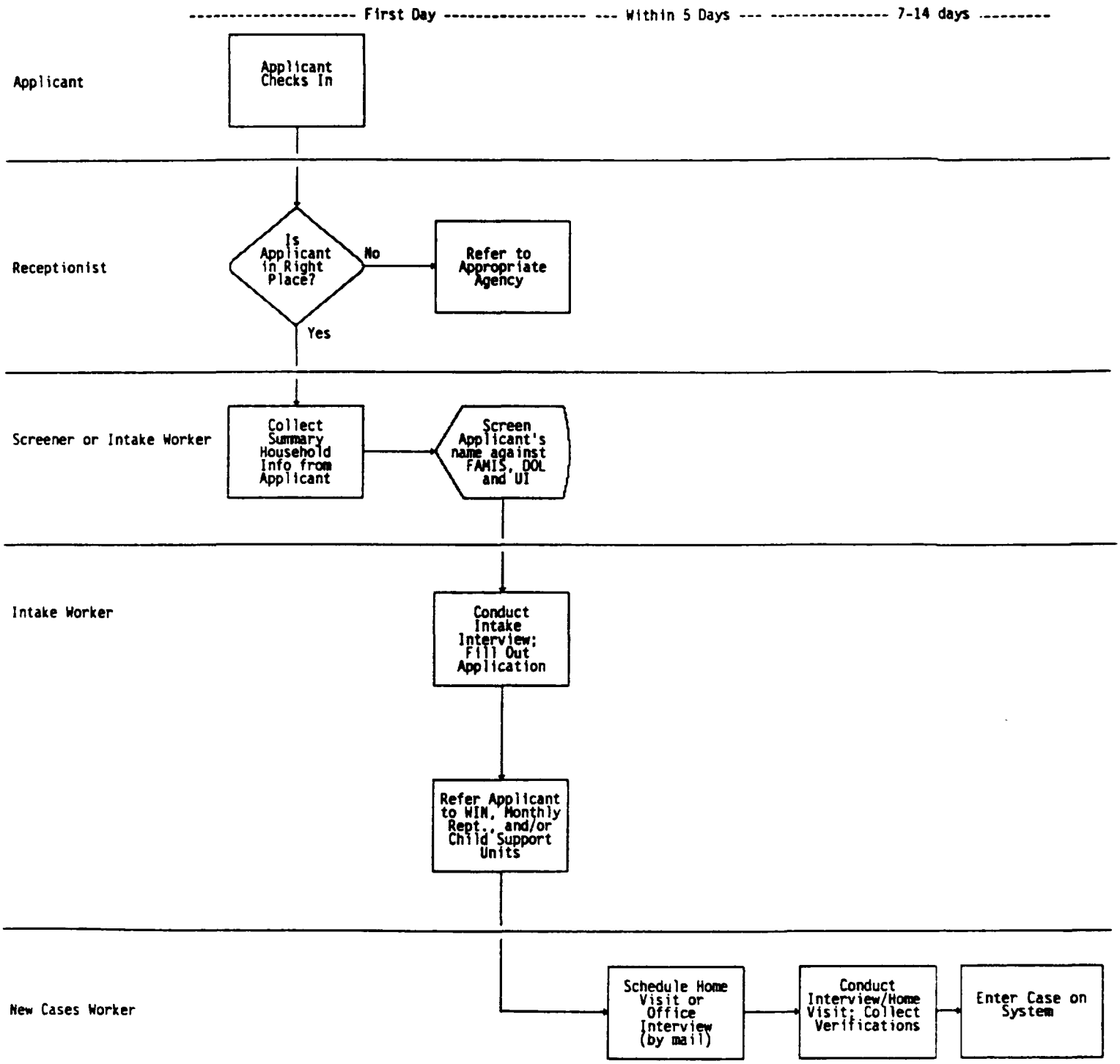

receiving aid or if an applicant is looking for services other than the programs administered there.

Current Hudson County food stamp recipients are sent to their ongoing caseworkers. If the receptionist can determine on the basis of summary information that the applicant is ineligible for AFDC but eligible for food stamps, she sends the applicant to the NPA building next door.

Applicants entering the NPA office building are greeted first by a security guard in a small entry way on the first floor, who directs them to the second-floor intake office. There, the receptionist takes applicant names and ascertains that these applicants intend to apply for food stamps.

The first step, initial screening takes about 20 minutes in both the PA and NPA offices. In the PA office, a worker -- who may be either a screener or an intake worker -- calls the next name on the register and brings the applicant into an interview area to conduct the screening interview. Although screeners conduct only screening interviews, intake workers do both screening and intake interviews. In the NPA office, initial screening is done by the receptionist.

The screening interview in the PA office is more comprehensive than the screening interview in the NPA office. In addition, while all applicant matching is done during the PA screening interview, applicant matching in the NPA office is divided between the screening interview and the intake interview.

For PA cases, the screening interview begins with a summary assessment of the probable eligibility of the applicant based on questions about their household financial resources and benefit history. Answers are recorded on an index card. If an applicant appears to have sufficient grounds to apply on the basis of this summary assessment, the screener (or intake worker) collects further information.

The next step is a computer check to see if the applicant or any member of the applicant's household is currently receiving welfare payments in New Jersey. Name, date of birth, maiden name if appropriate, and Social Security numbers (SSNs) of each household member is matched against the CODES database on a terminal that is shared by several screeners and intake workers.

If the match shows that the applicant or any member of the applicant's household has ever applied for, or received, aid in Hudson County, the screener enters the old case number on the index card mentioned above. If the applicant's household appears as a closed case on the CODES system, the screener receives a hardcopy printout of the case information contained in CODES. Finally, if the applicant's household does not appear on CODES but has received welfare in Hudson County at some time in the past, the screener sends a request for the hardcopy case file to the records department.

The PA food stamp screener also initiates the match against State wage and Unemployment Insurance (UI) benefit records. The screener routinely matches the name and Social Security number of each household member 16 years of age or older against UI and wage information. A dedicated terminal in the Hudson County Investigations Unit (located in the basement of the NPA building) allows online access to these files.

The screener telephones a data clerk in the Investigations Unit who sits by the DOL terminal, and who checks the UI file for each adult and older child in the applicant's household. The data clerk reports the result of the UI match to the screener over the telephone and prints a hardcopy of the information, if there is a record of current UI benefits. This information is sent to the screener to be attached to the case record.

The data clerk also matches applicant information against quarterly wage data using the Social Security number and name as identifiers. The data clerk must then check employer identification numbers in a separate file to obtain employer names and addresses. Wage data, which tend to be two to five months out of date are particularly used to identify principal earners in two-parent PA cases, to initiate verification of employment records for AFDC-UP cases, to determine whether applicants should apply for UI, and to decide whether to require proof that an applicant has left work.

The screening interview in the NPA food stamp application process is less comprehensive because during intake interviews, most of this information is collected by new-cases workers. The receptionist screens NPA food stamp

applicants gathering summary information about the applicant's household, including the address, name, date of birth, Social Security numbers, and maiden names for each

each individual for current food stamp and other welfare benefits at a computer terminal near the reception counter.

Step 2: The Intake Interview. For both NPA and PA cases, intake interviews are done on the same day as initial screening interviews and last from 50 to 45 minutes. In the PA office, a specialized intake worker does the interview, while in the NPA office, the interview is done by a new-cases worker who is responsible for processing the case through final determination of eligibility.

PA Food Stamps. When the screening interview is completed in the PA food stamp office, the screener leaves the index card and any other material (such as the old case file or the printout of the previous case history from the automated system) with the receptionist. The applicant is directed back to the reception area and waits for the next available intake worker. However, if the screening interview was done by an intake worker, the intake interview follows without interruption.

The intake worker reviews the index card of summary information on the applicant's household. If the applicant match against current automated welfare records indicates that the applicant is a member of a household currently receiving aid in Hudson County, the intake worker checks to see if the case has actually been closed but has not yet had a status change on the computerized files. If the applicant match indicates that the applicant is cross-referenced with a case apparently open in another New Jersey county, the intake worker asks the applicant to supply written proof that the case will be closed.

Table of Contents

address of the household; name and location of absent parents; recent employment history of all household members; how the household has supported itself for the last six months; whether the household is currently involved in any lawsuits; and any other household information that may have a bearing on the economic well-being and prospects of the household.

When an application is as complete as possible (usually lacking verifications only), the applicant is sent to register for other programs. These programs include the Work Incentive (WIN) Unit to determine work registration status, the Child Support Enforcement Unit (CSEU), if there is a parent absent from the household, and the Monthly Status Reporting (MSR) Unit for households that are currently receiving income or have received income within the last six months.

While the applicant is registering with these other units, the intake worker prepares the application file for the new-cases caseworker. This preparation includes collecting the old case file for the household and the hardcopy printout of any computerized records for the applicant household. The intake worker reviews the old household case files and records on a "face sheet" any additional household information.

After the applicant registers with other programs and furnishes proof of this registration to the intake worker, the worker reviews with the applicant all outstanding information or verifications required to complete the application. If there is a discrepancy between the information supplied by the applicant and the information found in previous case records, the intake worker asks the applicant to clear up any such discrepancies. Finally, each applicant is told s/he will receive a letter within a day or two that will list the needed documents. The intake worker also tells the applicant the name of the new-cases unit worker who will be responsible for processing the application after the required information is submitted.

If the applicant appears to be eligible for assistance on the basis of available information, a finding of presumptive eligibility may be made and the applicant can receive assistance on the day of application.

Table of Contents

NPA Food Stamps. The intake interview for NPA cases is slightly different. After an applicant has been screened by the receptionist, the applicant waits to see the next available new-cases unit worker for the intake interview. In most cases, the wait is less than 20 minutes.

The worker reviews the summary information collected by the receptionist and begins to fill out the application with the applicant. If the applicant is cross-referenced with another household in Hudson County and the case is open on the computer files, the intake worker checks the status of that case with the appropriate caseworkers. If the applicant is cross-referenced with another food stamp household in the State and the system indicates that the case is still open, the worker either asks the applicant to obtain written verification from the relevant county Division of Welfare that they are not involved in an open case, or actually calls the relevant county to check the client's involvement in the case. The intake interview then proceeds much as it does for PA applicants.

After the applicant and the intake worker complete as much of the application as possible, the applicant is sent to the MSR Unit for registration if the household has or has had earned or unearned income within the previous six months. When applicants return with proof of MSR registration, they are informed that the welfare office will send letters within a day or two indicating the outstanding documents and verifications (if there are any) required for eligibility determination.

Step 3: Final Eligibility Determination. The intake worker presents all relevant material -- the application, the old case file, computer printouts of the former case, and any other important household information -- to an intake supervisor for review. After supervisory review, application material is sent to the worker in the new-cases unit assigned to the case. The new-cases worker sends a letter to the applicant scheduling either an appointment at the welfare office or a home visit to the applicant's household; every third PA applicant is assigned a home visit as part of the eligibility process.

Table of Contents

At the eligibility interview -- either in the applicant's home or in the welfare office -- the application is completed. If the applicant does not show up for the interview, or if the applicant does not bring all the required verification material to the interview, a second appointment letter is sent to the applicant 30 days after the initial intake. The applicant then has one to two weeks to appear for the interview, or to send in the missing information. If documentation is not submitted fourteen days after the second appointment letter is sent, the application is denied.

Pending applications are reviewed by new-cases supervisors before data on eligibility determination are entered into FAMIS. After the supervisors sign off on an application, they are sent to the Document Control Unit (DCU) on another floor in the main Social Services building.

The DCU batches and numbers input documents (Form 105) and budget sheets returning all other application and case materials to the file room. The relevant data are batch entered directly into FAMIS, which automatically determines eligibility and calculates and generates benefits. (AFDC and food stamp benefits are simultaneously calculated.)

For NPA food stamp cases, the new-cases worker in the NPA office performs wage/UI matches late in the afternoon for all applications taken during the day. Thus, this information is not available for the initial intake interview, although it may affect the subsequent eligibility-determination process. If relevant information is discovered by this match and if there are issues that must be resolved by the applicant, these requirements are included in the letter mailed to the applicant listing outstanding verifications and documents needed for the eligibility decision.

Table of Contents

THE EFFICACY OF THE APPLICANT-MATCHING SYSTEM IN NEW JERSEY

This section explores the effectiveness of applicant matching in New Jersey. First, results from the quantitative cost-benefit part of the study that are particular to New Jersey are summarized. Then, the qualitative perceptions of local and State staff on the utility of applicant matching are explored, including the effect on payment error rates and the extent to which it deters client misreporting.

MEASURABLE COSTS AND BENEFITS OF APPLICANT MATCHING

The costs of applicant matching include staff time to both screen cases and followup on whatever discrepant information is discovered through the applicant matching process as well as charges associated with using the computerized databases. The staff time spent on screening was measured through time motion studies conducted on-site, while followup time was measured through worker time logs associated with each case.

The benefits of applicant matching include reductions in benefit payments based on information obtained from matching, denials of benefits to clients who would have been certified in the absence of matching information and, from these same denials, administrative cost savings from avoiding the administrative costs that would have been associated with keeping these cases on the rolls. These benefits were measured by abstracting information from a sample of cases (359 that went through to final certification or denial) on (1) what the applicant originally reported their household situation to be; (2) what household situation the final benefit determination was based on; and (3) whether any of the changes in the client's household situation, between that originally reported by the applicant and that used in final benefit determination, were attributable to computer matching. Changes attributable to applicant matching were translated into changes in food stamp, AFDC and Medicaid benefits, and projected over the period of time during which the applicant would have been receiving the overpayments in the absence of the matching information.

Information Obtained from Applicant Matching. Information obtained from applicant matching in New Jersey included data on the applicant's current and prior receipt of public assistance benefits, wage history and receipt of unemployment benefits. Each of these data sources were accessed more or

Table of Contents

less routinely to match applicants, at about the same frequency level. The benefit history records were accessed 84 percent of the time, unemployment benefits records, also 84 percent of the time, and wage records in 82 percent of the cases.

However, accessing these data sources did not necessarily produce information on the applicant -- that is, produce a "hit". The level of hits recorded for wage history matches, for example, was under 5 percent.

Even where matches were obtained, these hits did not often uncover discrepancies in the applicant-reported information. For the example cited above, wage record matching, the proportion of hits that uncovered discrepancies was about 8 percent.

Costs of Applicant Matching. The costs incurred obtaining the matching information described above were generally quite low. Total costs for matching the 359 completed cases were only $971.09, or an average of less than $3 a case.

Of this total, about one-quarter was accounted for by the costs of accessing the computerized databases -- roughly about 26 cents to screen an individual against a single database. The rest of the cost -- less than $700 -- was due to the staff time involved in screening the cases and following up on the match results.

One important reason why the staff time costs were so low is that screening the cases -- that is, performing the actual match on a computer terminal -- is not a very time-consuming process. Both the benefit history screening and the DOL screening (wages and unemployment benefits) took about a minute and a half, at a cost of less than 53 cents each.

Similarly, following up on match results did not consume a lot of caseworkers' time, either. This was because so many cases involved little or no followup time at all. Of course, where a match did not produce a hit, there was no followup time involved. And, even where there was a hit, if the match results simply corroborated the applicant-supplied information, the amount of time spent following up was very small.

Table of Contents

Benefits of Applicant Matching. Benefits from applicant matching can occur where benefit levels are affected by the results obtained from computer matching, or where denials could be attributed to these results. In New Jersey, there were only 8 instances where benefits were affected by discrepancies uncovered through applicant matching, and four of these were denials.

This produced a modest total savings of $2,797.78. Of this total, easily the largest proportion was due to matching on the benefit history database. Savings from this one database alone were almost $2,550 or over 90 percent of the total amount. The rest of the savings were from screening the wages database, which saved a little over $250. There were no savings at all from screening the unemployment benefits database.

Relationship of Benefits to Costs. Overall, the benefits of applicant matching in New Jersey, while not spectacular, substantially outweighed the costs. The ratio of benefits to costs was 2.9 to 1 and the net savings (savings minus costs) was $1,826.69 .

The most effective database, from the standpoint of net savings, was the benefit history database. Matching on this database generated a net savings (i.e., savings less costs) of $2,050. This was followed by matching on the wage database, where savings exceeded costs by only about $15.

Matching on some databases actually lost money. This was true of matching on unemployment benefits records, where a net loss of over $260 was realized. The reason for this was simple: the costs of matching this database, while low, were tangible and well above zero, while the benefits of the matching were non-existent.

In general, though, applicant matching in New Jersey certainly appears to be cost-effective. This cost-effectiveness is remarkable in light of how few benefit-impacting errors seem to be uncovered through applicant matching. However, even a small number of these errors, when translated into a monthly benefit savings, and projected out over a number of months, appear to be more than adequate to outweigh the low costs, and produce a favorable benefit-cost ratio.

Table of Contents

STAFF PERCEPTIONS OF APPLICANT MATCHING EFFECTIVENESS

Effect on Payment Error Rates. Both county and State officials felt that the applicant-matching system has improved quality control in the Food Stamp Program, although it precise contribution to a general trend in lower error rates cannot be determined. The food stamp overpayment error rate for New Jersey has declined slightly over the past few years, while the error rate for Hudson County has decreased even more dramatically, from a high of 10.4 percent in the October 1984-March 1985 period to 4.6 percent in the April-September 1986 period. County officials said that the online DOL match helped achieve this decrease, although the match is only one of a great number of error-reduction strategies employed by the county. State officials point out that duplicate issuances have virtually been eradicated with the use of the FIND function on CODES. In addition, there are almost no errors due to unknown receipt of UI benefits.

Deterrence Effects. Although Hudson County welfare management and staff have no direct evidence, they believe that applicant matching has been a powerful tool in deterring applicant misreporting. In particular, the use of a computer in the presence of the applicant to uncover information not supplied by the applicant or to corroborate information given by the applicant is thought to create an advantage for the agency during the intake interview and subsequent eligibility determination process. Applicants do not know what additional information caseworkers might have at their disposal and, in the opinion of Hudson County staff, are inclined to overestimate the amount of data available to the agency.

Effects on Case Processing. Both supervisory and caseworker staff in the Hudson County Division of Welfare claimed that the applicant-matching system has a number of advantages for accurate and efficient casework. The match against current and past food stamp receipt is believed to be helpful for casework in general, and not just as a check against duplicate issuance. In particular, the identification and reference to a case history, where it exists, was seen as an important tool for casework. The Hudson County office has a more traditional approach to the administration of income maintenance programs in which workers try to understand the fuller circumstances of the applicant household, including the way in which the household has supported itself in the

recent past. The ability to identify and retrieve prior case records through the FIND function of FAMIS aids this approach to casework.

In addition to these less-direct advantages, the online DOL match for UI benefits and quarterly wages is considered to be an effective tool to gauge the degree to which applicant-supplied information needs to be investigated. The availability of information about recent or current jobs and UI benefits early in the application process from an independent source allows workers some insight into whether or not applicants are supplying accurate and complete data about household circumstances.

Another advantage of applicant matching claimed by Hudson County caseworkers is the occasional ability to save some food stamp and other welfare benefits by identifying applicants eligible for UI. That is, the DOL online quarterly wage and UI match sometimes reveal the presence of a recently lost job without application or receipt of UI. In these situations, applicants are told to apply for UI during the food stamp application process. The resulting receipt of UI saves some benefit dollars.

In addition to the benefits of the applicant-matching system for the caseworker directly processing the cases, the system also helps supervisors. Since supervisors must review each application prior to eligibility determination and to entrance on the FAMIS files, the online matches provide more information for supervisory review. This allows the supervisor a better opportunity to determine if the worker has sufficiently followed up any important facts about the case revealed through applicant matching.

Finally, staff and management at the Hudson County Division of Welfare generally believe that the applicant-matching system has a number of clearly defined advantages and disadvantages for applicants. For those applicants not intending to withhold information, the matching system makes the application process more efficient by verifying some applicant-supplied information during the first day of the application process, thereby relieving some of the burden on the applicant. In addition, the DOL online match may even inform applicants of UI benefits to which they are entitled.

Table of Contents

Table of Contents

APPENDIX I

THE USE OF COMPUTER-ASSISTED VERIFICATIONS OF APPLICANT-REPORTED INFORMATION IN WAKE COUNTY, NORTH CAROLINA

For further information contact:

Wake County Department of
Social Services
P.O. Box 1247
Raleigh, NC 27602

Table of Contents

ACKNOWLEDGEMENTS

This case study of applicant matching in North Carolina was made possible with the kind assistance of many people. The author, Ruy Teixeira, gratefully acknowledges the help of: Cathy Casserly, who accompanied me on the site visit; Helen Lane, Chuck Menches, Evelyn Taylor, Jim Wight and many others too numerous to mention, who gave freely of their time during our visit to North Carolina; the many eligibility workers in the Wake County office who helped us to measure the costs of conducting applicant matching; and Jan Dunlap who abstracted data from the applicant case records. I would also like to thank Melody Bacha (the Project Officer), John Hitchcock, Edward Speshock and Jill Herndon of the Food and Nutrition Service who provided useful comments and suggestions throughout the course of this project and Michael Puma who directed the study for Abt Associates Inc. Finally, the report was produced by Marsha Strother.

Table of Contents

APPLICANT MATCHING IN NORTH CAROLINA

This study of applicant matching is based on three types of information: interviews with State officials and local staff from the Wake County welfare offices conducted during a five day site visit in July 1987; the abstraction of data from the application records of all individuals applying for food stamps in Wake County during a period of four weeks; and, worker time logs and time motion studies.

SUMMARY

Operational Description. Applicants seeking public assistance in Wake County must appear in person during business hours Monday through Friday. Initially, the receptionist fills out a screening form that collects only limited identifying information on each individual for whom benefits are being sought (e.g., name, Social Security number).

The screening form is passed to a clerical worker by the receptionist. The receptionist uses the screening form to match each household member against the Food Stamp Information System (FSIS) and the Eligibility Information System (EIS -- for AFDC and Medicaid), the State's online case management systems. This check, done for essentially all applicants, determines if anyone in the household is currently receiving, or has received in the past, food stamps, AFDC or Medicaid benefits anywhere in the State. This ensures against duplicate participation and, if the applicant was a previous beneficiary, provides prior case information that can assist eligibility workers to make a correct determination regarding the recent application. (The clerical worker also checks the county records to see if the applicant has ever received assistance in Wake County specifically.

Once the screening has been initiated, the receptionist sends the applicant to a waiting room for the intake interview. This interview, conducted by a caseworker from the eligibility intake unit, generally takes place within a few hours.

Prior to the intake interview the caseworker receives a case file containing all available case history documentation on

the individual. The application form is actually filled out during the interview by the caseworker. After the interview, the caseworker fills out a form requesting computer verifications.

These verifications typically include screening of all individuals against: records of employer-reported wages and Unemployment Insurance (UI) benefits (a match is found for about 70 percent of the applicants checked on wages and 32 percent on UI); motor vehicle records (yielding a match about 39 percent of the time); BENDEX and SDX records of Social Security and SSI benefits (yielding a match about 14 percent of the time for SDX and 9 percent of the time for BENDEX); and county real estate records (where a match is found for about 9 percent of applicants). Information on Child Suport Enforcement records and Department of Correction records can also be obtained, but these are rarely employed.

Information obtained from any matches is printed out and attached to the application forms. These are then forwarded to the assigned processing eligibility worker who will determine benefits for the client.

The processing eligibility worker reviews all of the information provided by the applicant as well as any discrepancies uncovered through the computer matches that have been done (e.g., unreported wages). Generally speaking, the burden of resolving such discrepancies is placed upon the applicant; however, eligibility workers sometimes conduct independent verifications such as contacting employers.

Incidence of Detected Discrepancies. Of the 348 applications that went to final determination or denial, only 27 had a discrepancy that was detected through applicant matching and which affected the household's benefits; eight of these twenty-seven were outright denials.

Costs of Applicant Matching. The cost of conducting applicant matching consists of the labor needed to screen client-reported information, the associated computer costs, and the cost of resolving any discrepancies that are detected. For the 348 applications in our sample, the total cost of applicant matching amounted to only $996 -- an average of less than $3 per application.

There are three reasons why the costs are so low: the time required to screen an application on the computer is only a few minutes; computing costs are generally small for such simple transactions; and, the number of discrepancies detected is relatively small, and for the most part, the burden of resolving them is placed on the applicant.

Savings From Applicant Matching. Even though only twenty-seven cases were found to have benefit changes, these cases generated about $6,902 in savings from reduced transfer payments (i.e., food stamps, AFDC and Medicaid) and avoided administrative costs. About half of these savings were a result of the match against the wage and UI records with another fifth each coming from the motor vehicles and real estate screening.

Combining the savings and costs produces a benefit cost ratio of 6.9, i.e., for each $1 spent on applicant matching almost $7 is saved. Clearly, applicant matching is very cost effective despite the low incidence of detected discrepancies. The costs are very low and the benefit savings associated with the small number of errors is large when projected over the time period during which the overpayments would be expected to be paid in the absence of applicant matching.

Other Benefits of Applicant Matching. In addition to the quantitative benefits noted above, State and local staff pointed out a number of other important benefits attributable to applicant matching: the front-end verifications provided by applicant-matching make a significant contribution to establishing the initial integrity of the case; and applicant matching automatically provides caseworkers with a variety of verifications of the applicant's situation that do not have to be searched for piece-by-piece as the case progresses, thereby saving time and effort later on.

ORGANIZATION OF CASE STUDY

This case study is divided into three parts: a discussion of aspects of applicant matching that are common throughout the State of North Carolina including the management and characteristics of the Food Stamp Program, the development of computer matching, a description of the databases and

Table of Contents

computer systems used, and future development plans; a description of those aspects of applicant matching that are specific to Wake County (the subject of our site visit) including the organization and characteristics of the Food Stamp Program in Wake County, application and verification procedures, and county-level databases and computer systems; and, a discussion of the costs and benefits of applicant matching as measured in Wake County.

Table of Contents

STATE DESCRIPTION

THE FOOD STAMP PROGRAM IN NORTH CAROLINA

Food Stamp Program Administration and Management. The Division of Social Services (DSS) in the Department of Human Resources(DHR) administers all of North Carolina's social service and income-maintenance programs. Within DSS, the Public Assistance Section manages the State's income maintenance efforts, including the Food Stamp and AFDC Programs. North Carolina does not operate State-funded General Assistance (GA), however, some counties maintain GA programs.

Within DSS, an Assistant Director for Program Administration is responsible for five sections: Family Services, Employment Programs, Child Support, Quality Control, and Public Assistance, where income-maintenance programs are located.

The Food Stamp Operations and Improvement Branch of the Public Assistance Section centrally administers the Food Stamp program. The local administrative units are the State's 100 counties where staff supervise day-to-day operations of the program. For administrative purposes, the counties are organized into four regions each having a coordinating office.

The Food Stamp Operations and Improvement Branch is divided into two units: Policy and Training and Automation Projects. Each unit is supervised by a Social Services Program Manager.

The Automation Projects Unit maintains the food stamp automated case-management system, FSIS; manages the Food Stamp program's interface with the online databases utilized in common by North Carolina's income maintenance programs; and generally ensures that the Food Stamp Program obtains support from DHR's Information Resources personnel.

Caseload Characteristics. In June 1987 the average monthly Food Stamp caseload in North Carolina was 158,292. North Carolina's food stamp caseload is overwhelmingly NPA; 82 percent of the food stamp households are NPA cases, compared with 52 percent nationally. The average household size for a food stamp case in North Carolina is 2.6 (2.58 NPA, 3.12 PA), with an average benefit level of $108.27 per household.

Table of Contents

Food stamp applications in North Carolina totaled 14,734 in June 1987. During that same month, 9,832 cases were certified, while 3,737 were deemed ineligible, a denial rate of about 25 percent.

Food Stamp Payment Error Rates. North Carolina's dollar-error rate was 4.33 percent for the 1987 fiscal year. For the current fiscal year, the error rate is slightly higher -- 4.7% percent through early July 1987.

In the early 1980s, North Carolina had very high (16 to 18 percent) payment error rates and had been threatened with Federal fiscal sanctions. Since that time, North Carolina's error rate has steadily declined -- to 5.4 percent in 1984 and even lower, to 4.9 percent in 1985.

State food stamp staff attribute the decreased error rate to automating the food stamp system, increasing verification efforts (including, but not limited to, computer matching), establishing shorter certification periods, and, during the last few years, instituting monthly reporting.

The most substantial decline in dollar errors has been in the earned-income category. Food stamp staff report that most earned-income errors result from changes in client financial situations after certification. Apparently, the increased success in detecting earned-income discrepancies through the use of monthly reporting and the matching of active recipients against external data sources such as DOL wage files has resulted in significant reductions to North Carolina's error rate.

This decline in the number of earned-income errors does not indicate a decline in the relative importance of earned-income errors. On the contrary, the proportion of dollar errors attributable to earned-income errors has remained fairly stable over the years (about 45 to 50 percent). The decline simply parallels the overall decline in the error rate, suggesting that the Food Stamp Program has had some success correcting earned-income errors, but the success rate for these errors is no higher than the program has experienced in correcting errors from other sources.

Table of Contents

Other error sources are unearned income and household size and composition; both sources, however, have substantially less effect on the Statewide error rate than earned income errors. While resource errors are not a major problem in North Carolina, they can have a significant effect on the State's payment error rate, because the resulting eligibility errors often lead to large overpayments.

SYSTEM DEVELOPMENT

Creation the Automated Case Management System. In North Carolina, the AFDC and the Medicaid program were automated prior to the food stamp program and initially involved only issuance of benefits. This was implemented Statewide in 1981 under Phase I of the development of the Eligibility Information System (EIS). Terminals in the county offices were primarily for data entry into this automated issuance system. Phase II, implemented in 1982-83, created a database for AFDC/MA that could generate reports and which also created the ability to do inquiries on applicant's benefit history. Phase III, currently underway, is a larger project that envisions a complete eligibility determination system for AFDC, Medicaid, and Food Stamps. The project's plan involves first achieving complete system operation for

Table of Contents

FSIS and EIS were elaborate projects, requiring extensive advance planning. Advance planning documents were issued for both projects, and, before implementation could proceed, a period of software development, with the assistance of outside consultants, took place. This involved setting the proper specifications for the software and then writing programs that could meet those specifications, within the limiting framework set by North Carolina's computer system. Once the appropriate software was written, the programs were tested in pilot counties, debugged, and then implemented Statewide. Statewide implementation included whatever terminal installation, wiring, and hardware connections at the local level were necessary for the system's functioning. These tasks were handled by State data-processing personnel.

In terms of training, once these systems were running, there were training sessions at the appropriate State offices, AFDC/MA for EIS and food stamps for FSIS, which were attended by representatives from each county, usually the head of data processing in that county. The representative then returned to the county level and trained the local staff. Additional training was provided as requested or needed by the four regional offices in the State.

Development of Computer Matching. The history of computer matching in North Carolina goes back to 1971, the year the first cross-match of AFDC rolls with ESC data was done in Craven County. This was also the year Wake County instituted its automated case-management system for AFDC, one of the first in the State. It was not until the 1980s, however, that the capabilities for applicant matching were created with the development of two components: an online, Statewide automated case-management systems; and the availability of online access to State and county databases.

The development of online access to State and county data-bases was initiated by the North Carolina of Human Resources (DHR). The Department took the responsibility for coordi-nating with the various agencies to ensure online access. The first database to be brought online was North Carolina's Department of Transportation (DOT) motor vehicle registration data base in August 1982. This database was, as were those to follow, debugged at the State level and then made avail-able to all counties at the same time. Programmers from DOT

and DHR worked together to ensure that the necessary information was available for county use. There was no pilot test of the system prior to statewide implementation. Once this information became available online, it was used for both food stamp applicants and recipients, a feature common to the development of online access to all of the databases currently in use.

The Department of Human Resources developed the direct online assess to ESC wages/UI data, beginning in December 1982. Prior to this, the match was done quarterly using hardcopy records, but the problem of timeliness had made this information impossible to use for applicants. With the availability of direct online access, counties had the capability to match applicants. Again, this program was debugged at the State level and made available to all counties and assistance programs simultaneously.

Online access to Wake County's property tax database also dates back to 1982. This capability, developed at the county level, was available to all assistance programs from its inception. The online access for BENDEX and SDX was introduced in June 1985, as part of Phase III of the development of EIS (online ESC access was also moved into Phase III). Prior to this, SDX/BENDEX information was used solely for recipients due to the timeliness problems intrinsic to batch matching. The match with the Department of Corrections became available in early 1986, under the auspices of the Child Support Enforcement program. Once again, although this information was to be used primarily for Child Support and AFDC, the system could be used for all assistance programs in all offices.

The planning and implementation process for online matching to State and county databases was much simpler than for the automated case-management systems. No advanced planning documents were written or needed for the development of online matching to ESC, DOT, DOC and county property tax records, or for SDX and BENDEX matching, except insofar as their inclusion within EIS, Phase III was concerned.

Planning to bring these databases online in local welfare offices generally involved little more than coordinating with the agency concerned and assigning data-processing personnel from the State assistance programs to work with data-

processing personnel from the agency owning the databases. They then wrote the programs to enable the interface necessary for online access to the database in question. Because access was through the same computer system and communications links used for the automated case-management systems, implementation was only a matter of running and debugging the program, and making local offices aware of its availability.

Training was also very simple. When databases became available, local data-processing staff would be informed that online access to the database had been implemented and given brief instructions on its use. In some cases, letters were sent to counties with details on the database and how to use it, though this was not always the case. The local data-processing staff would then train the rest of the local staff in how to access the database. As a rule, all of this was done at the local level, with no training by the State personnel whatsoever.

Problems Encountered. Two key problems were encountered in applicant-matching system development: terminal availability and the lack of system integration. Beyond these problems, however, the development of applicant matching has been relatively trouble free. In particular, there has been little or no trouble obtaining the cooperation of the other authorities in getting access to their databases. In all cases, these agencies are described by food stamp staff as having been cooperative and forthcoming with help such as programming assistance.

Persistently, throughout the time applicant matching has existed in North Carolina, there has been a problem of not having enough terminals available to do matching effectively. For example, when ESC data first became available online, most welfare offices had very few terminals that could be used for inquiries. Only with the increase in terminals that accompanied the advent of the FSIS system were most local food stamp programs routinely able to match applicants to ESC data. Before this, in many counties, online wages/UI matching for food stamp applicants was done episodically. Terminal availability further increased with the implementation of Phase III, leading to the current situation in which applicant matching is routinely done on all databases for all food stamp applicants.

Table of Contents

The various systems used in North Carolina for applicant matching are not currently integrated. Matching for a particular applicant can involve logging on and off of four separate systems. This is highly inefficient, resulting in the waste of staff time and the inability to use matching capabilities to their fullest. This has been a problem in North Carolina ever since they started Statewide automation of assistance programs in the early eighties. An unsuccessful attempt at an integrated system known as "Daisy" even predated the advent of EIS, but lasted only a few days. Since then, the EIS system that has been developed was intended as a fully integrated system to bring the AFDC, MA, and food stamp databases together, as well as to provide online access to ESC, DOT, and SDX. All that has been accomplished so far, however, is combining the first two phases of developing the AFDC/MA database, by linking the automatic issuance and record-keeping capabilities. All the other functions reside in separate systems.

Development Costs. As was true in most States, information was not available that specifically disaggregated development costs into those attributable to applicant matching and those attributable to other purposes. Generally speaking, the systems used in applicant matching were developed for purposes much broader than applicant matching (FSIS and EIS for overall case management and the online databases for expanding overall verification capabilities), making such disaggregated cost accounting almost impossible to do, even if it had been desired.

On an aggregate level, the FSIS system was reported to have cost $2,553,021 to develop, exclusive of the equipment purchases linked to its development. A recent expansion of the system, chiefly consisting of increased terminal availability, cost $403,320. The development of online access capabilities to State and county databases was viewed as being virtually cost-free. While some wiring was necessary at the county level to enable access to some of these databases, the only other costs of note were minor amounts of programming time to make these data accessible in the manner desired by the assistance programs.

STATE DATABASES USED TO VERIFY APPLICANT-REPORTED INFORMATION

Public Assistance Benefit Records. AFDC, MA, and food stamp records are not maintained on an integrated system. Food Stamp records are entirely contained within the FSIS system, while AFDC and MA records are in the EIS system.

Both databases are case management systems, whose purposes include general record-keeping as well as benefit issuance. Day-to-day responsibility for the two systems is with the data-processing units of the respective programs.

The FSIS system includes all open food stamp cases, as well as all cases closed within the last four years. Each case record contains: the name, SSN, date of birth, sex and race of the casehead; address; case number; application and issuance dates for last active case (if within three months); certification periods and re-certification date; number of household members; monthly food stamp benefit; history of food stamp benefit receipt within last three months; a variety of household information derived from the applicant's last active case (earned income, household expenses, including rent, medical and other deductions); and key information on other case members, including identifiers and income amounts attributable to those case members.

The EIS system includes all open AFDC and MA cases, as well as those cases closed within the last four years. Each case record includes: the name, SSN, date of birth, sex and race of the casehead; address; case number; number of household members; date case was created and date of last case action; all programs in which the case is, or has been, active; status of case within each program; determination periods and redetermination date; last county in which the case was active; monthly benefit amounts; history of benefits received within each program during last two years, including check dates, numbers, and amounts, where appropriate; identifiers of other case members; and key information items on the applicant's household situation, such as family status, earned and unearned income, and work and child care-related expenses.

The primary identifier to access EIS is name; for FSIS data can be accessed by FSIS case number, SSN or name (which is usually used as a last resort). Truncated first names can be used in either system: only FSIS permits a "sound-alike" search. SSNs or case numbers can also be used, but these

identifers are rarely employed, SSN searches require use of suffixes for SSNs that must be obtained from the Master Client Index (MCI).

Both databases are updated by online data entry, and current information is immediately available. There is, however, no on-line information about applications on EIS, because this system includes only active cases. FSIS has basic data on applications such as name, type of case (PA/NPA), date of application, and address.

ESC Wage and Unemployment Benefit Records. The Employment Security Commission (ESC) within the Department of Commerce maintains this database to administer the State Unemployment Insurance (UI) program. The database includes information on all individuals within the State who are working for wages or a salary, with the exception of those persons working for the Federal government or the military. Also, persons who work for private non-profit employers with fewer than four employees are not included in this system.

Wage data are based on reports from employers. A wage record for an individual, as accessed by the EIS system, goes back five quarters and includes: name, address, and SSN; total wages received by the individual in each of the five quarters; name and address of each employer from whom the individual received wages; and amount paid to the individual by each employer in each of the five quarters. Individual records are accessed by SSN.

UI data are ESC's internal records of transactions and information relevant to paying unemployment benefits within the State. A UI record for an individual, as accessed by the EIS system, goes back one year and includes: name, address, and SSN; eligibility status for UI; duration, dates, and amounts of claims within last year; benefits paid out, including check amounts, numbers, and dates; and benefits remaining to be paid out. These data are also accessed by individual SSNs.

The currency of these two data sets varies substantially. Wages are based on quarterly reports from employers, and are typically three to five months out of date. Employers are required to submit wage data no later than one month after a quarter ends; some employers wait until the last possible

moment to submit these materials. Some data are key entered by clerical workers, and the database updated through batch processing. Many employers, however, submit information on magnetic tape. The process may be delayed because of the high volume of data and the variety of formats in which data are submitted.

In contrast, the UI data are updated online with daily program transactions, with changes available statewide on the following day. Although there may be some minor lags before paperwork is keyed, once this is done, the file is updated immediately.

The ESC data are also used to match against records of active recipients of public assistance as required by IEVS. Those batch matches are conducted on a monthly basis, though any given individual is likely to be matched only once a quarter.

DOT Motor Vehicle Records. The North Carolina Department of Transportation (DOT) maintains a database of its official internal records of motor vehicle registration and related transactions for all motor vehicles registered within the State. The database includes a listing of all motor vehicles registered to a given individual, and, for each vehicle, the following information: name and address of owner/lessor; name and address of lessee; make and model of vehicle; title, tag and vehicle identification numbers; insurance indicators; odometer reading; class of vehicle; and pertinent dates, such as initial registration and last activity dates.

The DOT database is generally accessed using name as an identifier, but it is possible to search by tag, title and vehicle identification numbers, although these identifiers are rarely used in the welfare office.

The data are relatively up to date in terms of registration and re-registration transactions, although there can be some lag because of the online entering of paperwork. Frequently, the database is very dated with regard to title transfers and the like. It is possible for a vehicle to be listed in the name of a person who has not owned it for years.

Throughout the State, workers in welfare offices access these data online through the State computer system. Inquiries are routinely made by clerical workers as part of the food stamp

verification process, with results given to caseworkers for follow up prior to certification.

These data are not used to match against records of ongoing recipients of public assistance.

Department of Correction Records. North Carolina's Department of Corrections (DOC) maintains a computerized database containing information on the inmates of its prison system. These records include, among other things, work-release income and other information pertinent to inmates' finances.

This database is available online throughout the State through the State computer system. It is not, however, routinely accessed for the Food Stamp or other income-maintenance Programs, it is primarily used by the Division of Child Support Enforcement. Food stamp caseworkers access DOC data only when they suspect that work-release income or some other inmate financial resource may affect household resources.

These data are not used to match against records of ongoing recipients of public assistance.

Child Support Enforcement Records. Child Support Enforcement records of IV-D payers and payees are maintained by DHR. These data are available online throughout the State through the State computer system. In addition, some counties in North Carolina -- generally the larger ones -- have county-run Child Support Enforcement offices. In these counties, the somewhat more up-to-date county Child Support records can be obtained online through the county computer system. Caseworkers occasionally access these data for food stamp applicants where there is reason to suspect that child support payments may affect household resources.

These data are also used to match against records of active recipients of public assistance. This batch match is conducted on a monthly basis.

Table of Contents

FEDERAL DATA BASES USED TO VERIFY APPLICANT-REPORTED INFORMATION

BENDEX Benefit Records. The BENDEX database is built by the State from monthly data tapes provided by the Social Security Administration (SSA). (SSA also sends supplementary update tapes between monthly submissions). These data cover only those individuals receiving food stamps, AFDC, or MA in North Carolina and include all new information about Title II benefits received by these individuals. Information covering the previous four months is retained within the database.

The BENDEX database can be accessed only by SSN. A BENDEX record for an individual includes: name, SSN, and date of birth; county of residence; claim number and case identifiers; initial entitlement date; the North Carolina assistance programs in which the individual participates; date of last change in benefit status; and payment amounts for the last four months.

BENDEX tapes are loaded almost immediately into the EIS system and generally contain information up through the latest benefit month. In addition, the supplementary tapes are immediately loaded into the system.

These data are also used to match against records of ongoing recipients on a monthly basis.

SDX Benefit Records. The SDX database is built by the State from data received from SSA. Every month, SSA sends North Carolina a master tape of data on those individuals receiving SSI within the State; the data on the tape cover SSI benefits through the latest benefit month (which is typically one or two months ahead of the current date). Data processing personnel load this information into the EIS system as soon as the tape arrives. At any given time, the database contains four months of SSI data, including the data from the last month loaded, plus history data from the three previous tapes. Weekly updates are issued by SSA, but not loaded into the system. Hard copies of the updates are distributed to the county offices. Information on these supplementary tapes is included in the next month's master tape.

SDX inquiries can be made only by using SSN as an identifier. An SDX record for an individual includes: name, SSN, date of birth, sex, and race; living arrangements, and county of residence; claim number; date of initial eligibility; reason for eligibility; key information on household

Table of Contents

situation, such as countable earned and unearned income and resources; and payment amounts for the last four months.

IRS 1099 Records. This data source, matched on a monthly basis, is only used to verify records of ongoing recipients of public assistance. Applicants are not included in this batch match.

COMPUTER HARDWARE AND SOFTWARE

Central Computer. DHR does not have its own mainframe computer; instead, as with other North Carolina departments, it uses hardware located at the State's central computer center to run its computer operations. The computer center has an IBM 3090-600 that handles most of the State's computing needs.

The most important organizational division of the State's computer system is the two "regions" or "language areas" into which all operating space is divided, operating under a different data communications protocol, IMS or CICS. The IMS region contains the AFDC/MA database of EIS. (This part of EIS is referred to as Phase II; the different phases of EIS were described in the development section.) It also contains the DOT database. The CICS region contains the other part of EIS, (referred to as Phase III) and the ESC, SDX and BENDEX databases. This region also contains FSIS, the automated case-management system for food stamps.

The complexity of the State computer system and its division of operating space into regions produces some difficulties at the local level in making inquiries. The chief problem is lack of integration between the database systems in the different regions. A clerical worker, for example, cannot simply log onto EIS and both look at AFDC information and make an ESC inquiry. Since the two parts of EIS are located in different regions, the worker must log onto EIS, Phase III; make the AFDC inquiry; log off; log onto EIS, Phase II; select the menu item for ESC; and then make the ESC inquiry.

Also, because the AFDC/MA (EIS, Phase III) and FSIS systems are separate, stand-alone systems, they require separate log on and log offs. And, finally, the DOT database is not integrated into any of the other systems, so the user has to make another log on directly onto the DOT system to make vehicle inquiries. This all makes for a considerable amount of awkwardness and dead time when multiple inquiries are made.

Table of Contents

Communications. The State mainframe computer is linked to local welfare offices by telephone lines leased from local telephone companies. The terminals in the local offices are standard IBM 3270-type "dumb" terminals. Five IBM 3725 network controllers manage the data flow between terminals and the central mainframe. This forms the link, by high speed modem, to remote field site controllers of the 3270 systems network architecture/synchronous datalink control (SNA/SDLC) type. The local controllers connect the dumb terminals on the desks of clerical and eligibility staff through coaxial cable. Local hard copies are provided by desktop impact printers of the IBM 3287 type, connected to the 3270 controllers.

CICS supports interfaces between endusers and the central computer using the teleprocessing method, Advanced Communications Function/Virtual Telecommunications Access Method (ACS/VTAM). VTAM supports the direct transmission of data between terminals and the central computer as well as providing in session and application programs, management/monitoring functions.

Software and Operating System. The IBM computer system runs under the Multiple Virtual Storage operating system in Extended Architecture (MVS/XA) which controls programming in large online interactive computer networks. In terms of programming languages, the standard language used has been COBOL. The use of this language extends to all the applications relevant to applicant matching.

Security. The privacy and security of the different databases is maintained by various kinds of password systems. For the FSIS system, the State assigns a set of passwords for the different functions of FSIS -- such as search inquiries and data entry -- to a given county. County administrative personnel then communicate the appropriate password for a particular function to the workers with a need to use that FSIS function; the password permits the worker to log onto the system and perform that, but no other, function.

Security for the EIS system is handled in a slightly different manner. Each county appoints a security control officer who is assigned responsibility for EIS security

within the county. This officer then creates passwords for each EIS function, such as inquiries and case actions. A given password is communicated only to those individuals who have a need to use EIS for that particular function; most caseworkers appear to have at least inquiry capabilities on the EIS databases. The password permits the user to log on and perform only the assigned function.

Finally, each terminal used to access the State computer system has a separate password attached to it. Thus the worker seeking to access FSIS/EIS must know the password associated with the terminal before access to those systems can be attempted.

Access to the DOT and county databases is also controlled by password. Because of the role these databases play in the welfare office, these passwords enable search inquiries only, with no access for data entry.

FUTURE DEVELOPMENT PLANS

At this point, there are no concrete plans to expand the number of databases; the concentration is instead on improving the systems currently in place. This will be done essentially by addressing the problems of terminal availability and lack of system integration. Terminal availability is being addressed by vastly expanding the number of terminals in local offices (220 terminals for EIS and 115 terminals for FSIS have already been approved and ordered). The goal is to have a terminal on every caseworker's desk, and this appears to be well on the way to becoming a reality, at least in the larger counties. While this may not increase the amount of applicant matching, it may increase its effectiveness by allowing for more targeting of inquiries and more creative use of the matching capabilities of the existing system. The second, and trickier, task is to integrate the databases and case-management systems currently in use. Task forces are currently meeting on setting up the budget and staffing necessary to address the problem. One proposal is to start by integrating the FSIS database with access to the SDX, BENDEX, and ESC databases; basically, combining FSIS with EIS, Phase III. The AFDC/MA database (EIS Phase II) would presumably be integrated with this new system. At this point, however, system integration is unlikely to happen within the next calendar year. State staff said candidly that the exact road forward to this goal remains unclear, though they are optimistic that the goal will be attained within a reasonable period of time.

Table of Contents

DESCRIPTION OF APPLICANT MATCHING IN WAKE COUNTY

THE FOOD STAMP PROGRAM IN WAKE COUNTY

The Wake County welfare office is the subject of this section of the North Carolina case study. This office, which is located in downtown Raleigh, is administered by the Wake County Department of Social Services (DSS). Wake County DSS oversees local operation of all programs operated by the Economic Services Commission.

The average monthly caseload in Wake County is 4,729, the seventh largest caseload in the State. Across the State, local offices average 1,583 cases per month. Because Wake is an urban county -- Raleigh, the State capitol is the county seat -- NPA cases account for about 57 percent of the caseload as compared with the 82 percent NPA caseload reported by the State.

In Wake County, the average household size of 2.45 (2.51 NPA, 2.37 PA) -- about the same size as the State average. Benefit levels average $111.28 per household which is 3 percent higher than the State average.

In June 1987, Wake County received 616 applications, with 355 certifications and 214 denials. Wake's 35 percent denial rate is 10 percent higher than the Statewide average.

Staffing and Organization. The welfare office in Wake County has five components: Food Stamps; Applications/Training; AFDC; Medicaid; and Program Integrity. The first two sections are of interest here.

The eligibility intake unit in the Applications/Training section has nine caseworkers and a clerical worker who take applications and interview applicants for all public assistance programs. The caseload per worker is about six to eight cases per day, with all responsibilities for a given case completed in a day.

The Food Stamp section handles clients who have completed initial intake interviews. This section consists of three caseworker units and a clerical support unit. Caseworker Unit I, with seven caseworkers and a supervisor, handles ongoing non-public assistance (NPA) food stamp cases who have already been certified and whose next scheduled case action is recertification.

Unit II has a supervisor and eight caseworkers, six of whom process NPA applications, beginning after initial intake interviews and concluding with certification or denial of benefits. One of the six caseworkers specializes in expedited service cases. The other two caseworkers handle ongoing NPA cases.

Unit III has seven caseworkers, a supervisor, and a clerical worker. Four workers handle public assistance (PA) food stamp cases, including processing applications and ongoing case management. They also handle monthly reporting functions. (Monthly reporting, however, is now being centralized within a group of specialized workers. This centralization is a result of a significant expansion in monthly reporting within the office). These workers also assume ongoing case management responsibilities for these recipients.

In addition, in Unit III, one worker handles ongoing NPA food stamp cases, one handles ongoing NPA cases and monthly reporting for NPA cases, and a third specializes in monthly reporting for NPA cases. The clerical worker attached to the unit is primarily involved in monthly reporting.

Caseloads for these workers vary with their assignments. Ongoing NPA workers have the highest caseloads, averaging between 310 and 330 cases at any given time. The next highest caseloads are carried by the PA workers, who handle about 240 cases, and the NPA monthly reporting worker, who carries about 225 cases. The lowest caseloads are those of the expedited food stamp worker (140 to 160) and the NPA processing workers (90 to 120).

COUNTY DATABASES

Workers in Wake County have online access to all of the State and Federal databases. In addition, they use a county

APPLICANT REPORTED INFORMATION

Wake County Property Tax Records. The Wake County Tax Office maintains a database of its official internal records on all taxable property in the county, including buildings, houses, and boats. There is a separate record in the database for

Table of Contents

This database is typically accessed using name, although other identifiers are available for searching the database, including address, tax account number, and parcel number.

The currency of the data varies by time of year. The database is updated online, but the county does not have sufficient staff to keep it current, especially after a large influx of transactions. During the first part of the year, the staff updates the file with data from the previous year, so information tends to be out dated. During the second half of the calendar year, when the flow of transactions slows down, the data are more current.

COUNTY HARDWARE AND SOFTWARE

The use of the county computer system for applicant matching is very simple. Wake County has a single IBM mainframe, connected through a leased phone line to the local welfare office. The office has three IBM "dumb" terminals connected solely to this system.

All the counties in North Carolina have accessibility to applicant-matching capabilities for the State databases, with all 100 counties having terminals connected online. Accessibility for local staff in any office is limited by the amount of available terminals. In Wake County, for example, terminals are distributed in the following manner: five in the data-processing unit; three in AFDC; three in food stamps; one in Medical; two at the front reception desk; one in the Record Center; and one in Intake -- clearly far short of a terminal for every worker. As a result, these terminals are mostly used by designated clerical workers, and are not easy for caseworkers to use to perform inquiries in the course of processing a case.

A significant expansion of terminal availability is planned, with the intent of placing one on the desk of every caseworker who handles applications and ongoing cases. Wake County staff anticipate this level of accessibility by the end of 1987; at the time of the site visit, many of these terminals had been delivered and needed only to be connected.

Table of Contents

APPLICATIONS AND VERIFICATION PROCEDURES

The food stamp application process in the Wake County office is described in this section. A flow chart summarizing procedures appears in Exhibit 1.

In the Wake County welfare office, case processing for food stamp applications essentially involves four steps:

- Step 1 -- Initial intake,
- Step 2 -- Intake interview,
- Step 3 -- Verifications, including computer matches, and
- Step 4 -- Follow up and benefit determination.

The third step encompasses most computer matching.

Step 1: Initial Intake. Recipients and applicants are checked in by a receptionist who separates ongoing cases from applicants. The receptionist fills out a screening form for each applicant. The form contains: name; marital status; address; date of birth; Social Security number (SSN); race; and assistance requested. Information is recorded on the applicant and his/her spouse.

A trained clerk uses this screening form to obtain preliminary data from the county welfare office's automated record system, the Food Stamp Information System (FSIS), and the Eligibility Information Systems (EIS) for AFDC and Medicaid. Each system is accessed at a different terminal At the first terminal, the clerk determines whether or not the applicant has ever submitted an application for, or received, public assistance in Wake County. The county's system returns case information, including the five digit county or DSS case number.

For each applicant, the clerk accesses the FSIS system (at the second terminal) to obtain information on whether or not the applicant has received or is receiving food stamps in any county in North Carolina. After trying the name on the application, the clerical worker may also try truncated first names, alternative last names, and "sound-alike" inquiries. Matches are printed out.

Table of Contents

EXHIBIT 1: THE FOOD STAMP APPLICATION PROCESS

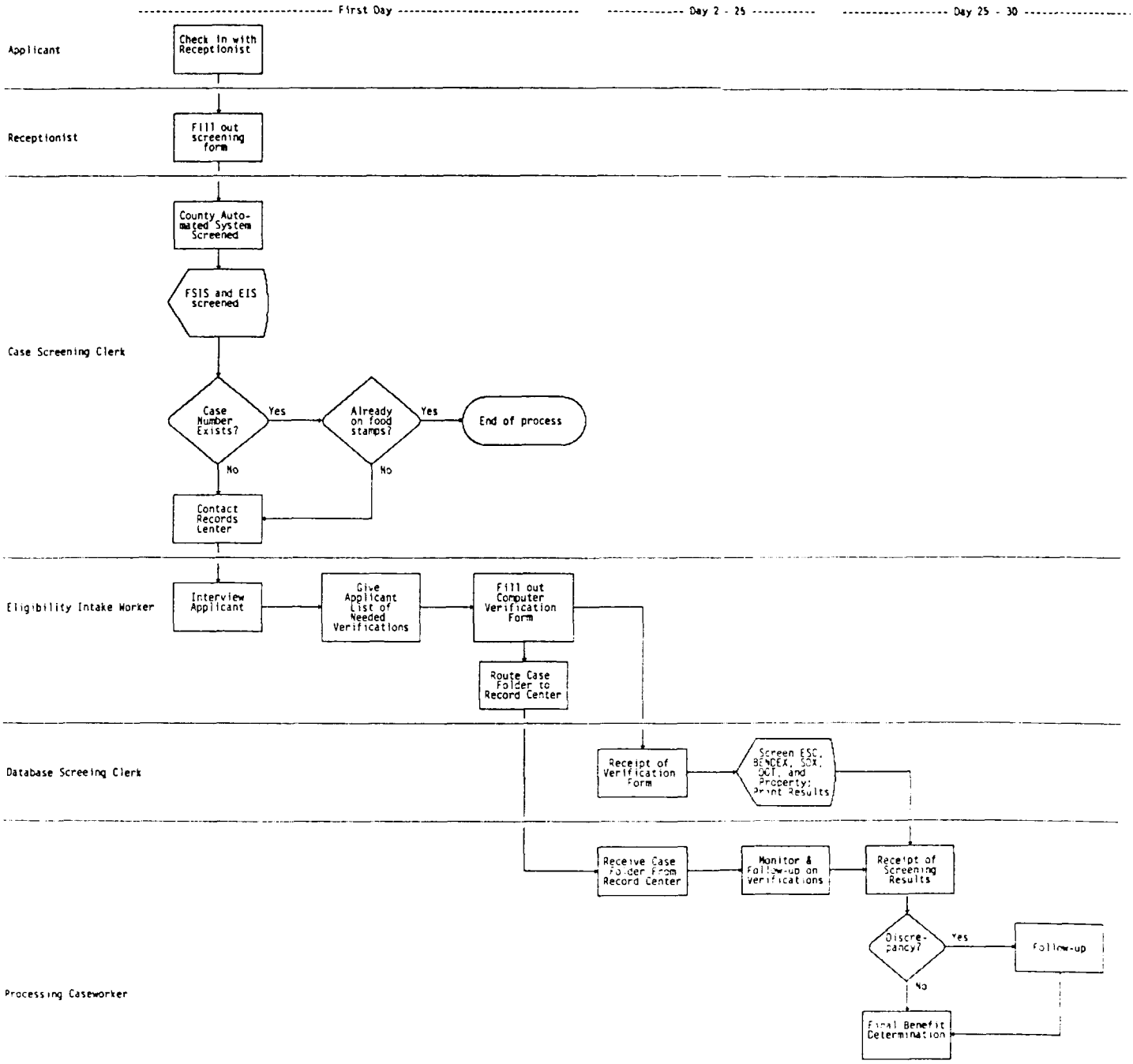

Finally, the clerical worker moves to the third terminal and ccesses the EIS system in which information about AFDC and MA cases is located. Essentially the same procedure is followed, starting with the name on the application and moving farther afield if necessary. Information is again printed in hardcopy.

This initial computer-matching has several purposes. Knowing former case numbers enables staff to locate applicant case files, because DSS numbers form the basis of their filing system. These numbers are used with the current applications to maintain a system of unique case numbers and records.

The second purpose is to ensure against duplicate participation in any public assistance program. The FSIS and EIS inquiries indicate if applicants are currently participating in an assistance program in any of the other 99 counties. If they are, they are informed that their cases must be either transferred to Wake (AFDC) or closed in the other county and re-opened in Wake (food stamps), through the reapplication process.

The third purpose is to obtain the eight-digit State case number used for the current or previous cases. This number, different from the DSS or county number, identifies an applicant or client within the EIS or FSIS systems and is used as the case number for the current applicant. Finally, the EIS and FSIS systems provide current information on any payments the applicant may be receiving from assistance programs, on household members in current or previous cases, and on various aspects of the applicant's financial situation.

The Records Center, where all inactive records case are physically stored, is contacted through the automated system. Using the DSS case number, the Records Center staff print out information on a previous case, including name of casehead, names of other case members, date client last applied for assistance, and the "box number" where hard copy files are stored. This printout is included in the new case record.

DSS numbers also allow automated access to case files on microfiche. Six years ago, to limit space needed to store

closed case records, as well as to make the record system more efficient, Wake County began filming closed cases. Microfiche are pulled from storage and attached to routing slips, which serve as casings for the fiche. Paper records are pulled when cases are not on microfiche or in the automated databases. Hardcopy and fiche are both pulled when both are available.

All of the information from these inquiries is sent to the eligibility intake unit. A routing slip is also sent to the eligibility intake unit, where the applicant will be interviewed later in the day.

After applications are taken, clerks prepare case folders and, for new cases, assign DSS numbers. The clerical worker attaches an index card to each case folder which includes the applicant's name, address, Social Security Number, other known household members, date of birth, and relationship to the applicant, plus the DSS number. The folder is sent to the Food Stamp Office. All applications that are delivered to the Food Stamp Office are listed on a computer printout with updated information or the client, the application date and the worker's name that is assigned to the case.

Step 2: Intake Interview. Within a few hours of the applicant having entered the Wake County office, an eligibility intake worker conducts an interview. These generic workers process applications for all programs for which the applicant is seeking assistance.

Appointments are made at intake for individuals who are working or who have limited transportation available. Other applicants are interviewed on a first come, first served basis. These applications are assigned to food stamp processors alphabetically by client's last name.

During each interview, the worker and applicant complete the application. There is a separate form for each program, and the worker enters applicant answers on each form. When the interview is finished and the information needed is complete, the applicant signs the forms and receives a list of needed verifications.

When a client needs to apply for more than one program, i.e., Food Stamps and AFDC, the intake worker collects income and

household composition information for one program and completes one set of application forms. The client then signs the applications for both programs. The intake worker then transfers information from one document to another, and makes appropriate copies of information needed by both programs. The worker completes computer verification forms for each program and a list of information needed to determine eligibility is given to the client.

On the computer verification form, the names of all household members are listed, including children, regardless of age. Even if children are not old enough to work or own property, the Food Stamp Program requires that each child's name and SSNs be checked, because they could be used by parents to avoid detection. The second column lists SSNs of all household members. The Food Stamp program requires that all household members have a social security number. They must provide a number at application or a receipt from Social Security that an original number or a duplicate card has been applied for.

Five inquiries are listed for on the form: Wage and Unemployment Insurance records of the Employment Security Commission (ESC), Department of Transportation (DOT) records, County property tax records, BENDEX, and SDX. All inquiries are mandatory and are completed for each member of each case.

The intake worker also begins to complete a data entry document, the DSS 8590. Eventually, the calculation of benefits will be based on data from this form. The case folder is sent to the Records Center and then to the processing worker assigned to the case. The inquiry checklist is sent to a specially trained verifications clerk who performs the computer matches; the DSS 8590 goes to the Data Entry unit.

Step 3: Verifications and Computer Matches. The Food Stamp program maintains a thirty-day standard of promptness, so that an eligibility decision and benefits or a denial letter must be issued within that time period. Verifications must be submitted by the twenty-fifth day in order to calculate and issue benefits by the thirtieth day.

Just as verifications must be returned within twenty-five days, the computer inquiries must also be completed within

the twenty-five-day time limit. Verifications clerks file and complete the inquiry checklists by date of application.

In Wake County, verification clerks routinely attempt to match applicant-supplied information against the ESC, SDX, and BENDEX databases. These three databases are accessed through the EIS system. However, each database has a separate menu within the system, so clerks tend to work through all checklists on one system, and then screen all checklists against the second and third systems. For each individual on each checklist for each database, the clerk notes "Hit" or "No Hit."

When a database contains information, the clerical worker accesses the details of this information with a few key strokes and prints a hard copy, which is attached to the checklist.

A similar procedure is followed for computer matching with DOT's motor vehicle records. This database cannot be accessed through EIS, so clerks tend to complete all EIS inquiries before beginning DOT inquiries. Matching on the DOT database is done by name, rather than SSN. Not only is an inquiry done on every case member, but several different inquiries can be done on the same individual, because first name truncations and alternative spellings can be used.

When all DOT inquiries have been completed, the clerk logs off of the DOT system and moves to another terminal to clerk county property records. Property inquiries are done by name, so all household members can be checked. The county system searches the property database until it finds the page on which the individual's name is, or would be, alphabetically located.

When this page comes up, the clerk checks for the individual's name or something close to it. If it appears that a listing may refer to the individual, a keystroke accesses the detailed information on the property holding. If the information appears to apply to that individual, a notation is made of the listing so that a printout of the information can be made at another terminal to which a printer is connected. (The county terminal in the food stamp section has no printer attached to it.)

Table of Contents

Step 4: Followup and Eligibility Determination. Once all matches have been performed, the clerk forwards checklists with all hits attached to the appropriate case processing workers, who follow up on this information.

If the information simply confirms what applicants reported in their applications, no followup is needed. Followup is necessary, however, when the computer inquiry returns information either not on the application or that seems to contradict applicant-supplied information. Because UI benefit records are up-to-date, UI data are considered verified by the system, and no followup is needed. The applicant may be contacted, however, if the UI records show eligibility for unemployment benefits for which the client has not applied.

Workers usually contact applicants, asking for check stubs, deeds of sale, title transfers and the like, when databases have supplied information that is different from data provided by applicants. Workers also review information to determine whether or not contacts with landlords or other individuals or institutions are needed.

A worker can also request supplemental computer inquiries, using the Department of Corrections database or Child Support Enforcement records. Such inquiries are infrequent.

When the case record is complete, the caseworker fills out an application worksheet to provisionally review eligibility and benefits. This information is transferred to the DSS 8590. This form, which Data Entry has returned to the worker, serves as the "turnaround document" (TD) for the automated system.

The completed application, worksheet, and the DSS 8590 are reviewed by the worker's supervisor who determines that the application has been correctly completed, including necessary computer matches and verifications, that eligibility and benefits have been correctly calculated, and that the DSS 8590 is completely and accurately filled out. Then, the DSS 8590 is sent to data processing where the case is entered into the FSIS system, which makes the eligibility determination official and which initiates benefit issuance.

Table of Contents

The DSS 8590 form is returned to the caseworker, who checks it for accuracy and who enters the final eligibility determination and certification period on the original index card. The worker also logs the date and case disposition into a black book each processing group uses to track its cases. The completed case file is then passed on to the assigned ongoing worker. Cases are assigned using an alphabetic system, based on the names of household heads.

Table of Contents

THE EFFICACY OF THE APPLICANT-MATCHING SYSTEM IN NORTH CAROLINA

This section explores the effectiveness of applicant matching matching in North Carolina. First, results from the quantitative cost-benefit part of the study that are particular to North Carolina are summarized. Then, the qualitative perceptions of local and State staff on the utility of applicant matching are explored, including the effect on payment error rates and the extent to which it deters client misreporting.

MEASURABLE COSTS AND BENEFITS OF APPLICANT MATCHING

The costs of applicant matching include staff time to both screen cases and followup on whatever discrepant information is discovered through the applicant matching process, as well as charges associated with using the computerized databases. The staff time spent on screening was measured through time motion studies conducted on-site, while followup time was measured through worker time logs associated with each case.

The benefits of applicant matching include reductions in benefit payments based on information obtained from matching, denials of benefits to clients who would have been certified in the absence of matching information and, from these same denials, administrative cost savings from avoiding the administrative costs that would have associated with keeping these cases on the rolls. These benefits were measured by abstracting information from a sample of cases (348 that went through to final certification or denial) on (1) what the applicant originally reported their household situation to be; (2) what household situation the final benefit determination was based on; and (3) whether any of the changes in the client's household situation, between that originally reported by the applicant and that used in final benefit determination, were attributable to computer matching. Changes attributable to applicant matching were translated into changes in food stamp, AFDC and Medicaid benefits, and projected over the period of time during which the applicant would have been receiving the overpayments in the absence of the matching information.

Information Obtained from Applicant Matching. Information obtained from applicant matching in North Carolina included data on the applicant's current and prior receipt of public assistance benefits, wage history, receipt of unemployment

benefits, receipt of Social Security benefits (both regular Title II and SSI), motor vehicle and ownership and, in Wake County, real estate ownership.

Each of these data sources were accessed routinely. The rate of access for each of them was 97 percent or higher.

Data sources varied widely, however, in how often accessing the source actually produced information on the applicant -- that is, produced a "hit". The highest level of hits was recorded checking wage records, where 70 percent of attempts produced information about the applicant. In contrast, only 32 percent of attempts on the UI database produced hits, 14 percent of attempts on the SSI database and just 9 percent each on the regular Social Security benefits and real estate databases.

Even where matches were obtained, these hits did not usually uncover discrepancies in the applicant-reported information. The highest proportion of hits that uncovered discrepancies was 23 percent, for the regular Social Security benefits. This was followed by was SSI hits, at 17 percent. The lowest proportions of discrepancy hits were for wage hits (5 percent) and unemployment compensation hits (4 percent).

Costs of Applicant Matching. The costs incurred obtaining the matching information described above were generally quite low. Total costs for matching the 348 completed cases were only $995.79, or an average of less than three dollars a case.

Of this total, over three-fifths was accounted for by the costs of accessing the computerized databases -- roughly about 26 cents to screen an individual against a single database. The other two-fifths of the cost was due to the staff time involved in screening the cases and following up on the match results.

One important reason why the staff time costs were so low is that screening the cases -- that is, performing the actual matches on a computer terminal -- is not a very time-consuming process. With the exception of benefit history screening, these matches took less than a minute a case, at a cost of about 20 cents each.

Similarly, following up on match results did not consume a time, either. This was because so many cases involved little or no followup time at all. Of course, where a match did not produce a hit, there was no followup time involved. And, even when there was a hit, if the match results simply corroborated the applicant supplied information the amount of time spent following up was very small.

Benefits of Applicant Matching. Benefits from applicant matching can occur where benefit levels are affected by the results obtained from computer matching, or where denials could be attributed to these results. In North Carolina, there were only 27 instances where benefits were affected by discrepancies uncovered through applicant matching, and eight of these were denials.

This produced a modest total savings of $6,901.72. Of this total, easily the largest proportion was due to matching on the wage database. Total savings from this one database alone were almost $2,850 or over two-fifths of the total amount. The next largest savings amounts were from screening the real estate and motor vehicles files which each saved almost $1,400.

However, matching on some databases produced much smaller savings or none at all. Matching on SSI files only saved about $144, while benefit history matching saved nothing at all.

Relationship of Benefits to Costs. Overall, the benefits of applicant matching in North Carolina, while modest, substantially outweighed the costs. The ratio of benefits to costs was 6.93 to 1 and the net savings (savings minus costs) was $5,905.93.

The most effective database, from the standpoint of net savings, was that for employer-reported wages. Matching on this database generated a net savings (i.e., savings less costs) of over $2,700 almost half of the total net savings. This was followed by matching on the real estate and motor vehicles databases, which each netted over $1,200 in savings.

Matching on some databases actually lost money. This was true of matching on benefit history matching, where costs

Table of Contents

exceeded savings by over $200. The reason for this is simple: the costs of matching these databases, while low, were tangible and well above zero, while the benefits of the matching were non-existent.

In general, though, applicant matching in North Carolina appears to be cost-effective. This cost-effectiveness is impressive considering that the number of benefit-impacting errors uncovered through applicant matching is rather low, especially in light of how much information is accessed for each case. However, even a small number of these errors, when translated into a monthly benefit savings, and projected out over a number of months, appear to be more than adequate to outweigh the low costs, and produce a favorable benefit-cost ratio.

STAFF PERCEPTIONS OF APPLICANT MATCHING EFFECTIVENESS

Effect on Payment Error Rates. While it is true that the error rate has been going down since the time of the introduction of applicant matching in North Carolina and that the error rate is now at a fairly low level -- under five percent -- staff said they did not feel that a causal connection can reasonably be made between applicant matching and the decline in the error rate. While applicant matching may have made a contribution in this direction, a number of other factors are cited as being of greater importance.

First, the automation of food stamp case management through FSIS in 1983 is viewed as making a large contribution in this direction. This allowed a number of repetitive or mathematical functions to be handled automatically that had previously been done manually and subject to much error, including client budgeting, eligibility calculations, and benefit determination. By all accounts, the FSIS system has proved a big success in performing each of these functions, so its contribution to bringing down the error rate may have been considerable.

Second, the introduction of shorter recertification periods is viewed as having had an important effect on error rates. Recertifying clients at shorter intervals, with the increased opportunity for interviewing the client and thoroughly verifying their household situation, allows for the detection of errors that may have gone uncovered in a longer recertification period.

Table of Contents

Third, the State has made a concerted effort to get the counties to broaden both the scope and frequency of client verifications. Therefore, at the same time that computer matching has been increasing, all other types of verification have been increasing as well. This generally increased verification activity, not so much the specific increase in computer matching for applicants, is seen by State officials as making a very significant contribution to bringing down the error rate.

Finally, in terms of computer matching specifically, it is difficult for staff to separate out the effects of matching for recipients -- both batch matches on the ongoing caseload and matching at recertification -- from the effects of matching for applicants. In fact, to the extent they say they can do this, they tend to ascribe somewhat more effectiveness in terms of the number of discrepancies detected to the recipient matching. This is because most discrepancies arise from interim changes in clients' situations. Their situations are fairly well-established at the time of a given case action like certification, but after that it changes, and the client either does not wish or is unaware of the need to report the change. The one area of applicant matching that does, however, appear to have been most effective is the use of FSIS to prevent duplicate benefits.

Deterrence Effects. If applicant matching is not having a large effect in terms of detecting applicant misreporting, it is still possible that it is preventing errors by deterring at least some applicants from misreporting their household situation. Staff in North Carolina, however, said they did not believe such deterrence effects were a significant factor. The sentiment was that, despite being informed of the use of computer matching in the Food Stamp Program, applicants would not have changed their information. Also, it was felt that the applicants who were inclined to try to "beat the system" would not be deterred by applicant matching, but simply try to figure out a way around it.

Overall, then, staff in North Carolina do not see applicant matching as having had a large effect on reducing the error rate. On the one hand, they see a number of factors that limit the effectiveness of applicant matching. On the other hand, they see a number of other factors that can be

Table of Contents

plausibly linked to the decline of the error rate, some of which are viewed as being very important indeed. These considerations combine to make them very skeptical of making a causal connection between the introduction and expansion of applicant matching and the decline of the payment error rate in North Carolina.

Effects on Case Processing. Overall, staff view the effects of applicant matching on case processing positively. They do not see the work entailed in applicant matching as being too burdensome, noting that their timeliness record at this point is very good. The portion of applications in the State that are not decided within the thirty-day standard of promptness is a very low 3-4 percent, with thirty to forty counties having no overdue cases at all.

Staff see all the front-end verifications provided by applicant matching as making a significant contribution to establishing the initial integrity of the case. Applicant matching automatically provides caseworkers with a variety of verifications of the applicant's situation that do not have to be searched for piece-by-piece as the case progresses. This not only potentially saves time and effort later on, but ensures that the initial assessment of the applicant's situation is on as solid a foundation as possible. Staff said that establishing the basic parameters of a case early in this fashion, rather than accumulating more and more information as time goes on, is very beneficial to overall case processing.

Table of Contents

APPENDIX J

THE USE OF COMPUTER-ASSISTED VERIFICATIONS OF APPLICANT-REPORTED INFORMATION IN SIOUX FALLS, SOUTH DAKOTA

For further information contact:

Food Stamp Administrator
Department of Social Services
Richard F. Kneip Building
700 N. Illinois Street
Pierre, SD 57501

Table of Contents

ACKNOWLEDGEMENTS

This case study of applicant matching in South Dakota was made possible with the kind assistance of many people. The author, Alan Werner, gratefully acknowledges the help of: Margot Cella, Michael Puma and Ruy Teixeira who accompanied me on the site visit; Michelle Prestbo, Lennie Griffith, Judy Barnes, Julie Osnes, Dave Christensen and many others too numerous to mention, who gave freely of their time during our visit to South Dakota; the many eligibility workers in the Minnehaha County Office who helped us to measure the costs of conducting applicant matching; and Betty Wallace who abstracted data from the applicant case records. I would also like to thank Melody Bacha (the Project Officer), John Hitchcock, Edward Speshock and Jill Herndon of the Food and Nutrition Service who provided useful comments and suggestions throughout the course of this project. Finally, the report was produced by Marsha Strother.

Table of Contents

APPLICANT MATCHING IN SOUTH DAKOTA

This study of applicant matching is based on three types of information: interviews with State officials and local staff from the Minnehaha County welfare offices conducted during a five day site visit in June 1987; the abstraction of data from the application records of all individuals applying for food stamps in Minnehaha County during a period of seven weeks; and, worker time logs and time motion studies.

SUMMARY

Operational Description. Applicants seeking public assistance in Minnehaha County must appear in person during business hours Monday through Friday (NPA applicants in particular must come around 3 pm). The office also accepts phone calls for appointments and requests for application forms (the forms are mailed the same day). If an applicant is elderly or disabled a telephone interview or a home visit can be used.

Generally speaking, they will be asked to complete an application form that collects detailed information about each individual related to eligibility for benefits including sources and amounts of earned and unearned income, resources, and expenses.

Once the individual has completed the application form, the receptionist passes the application to a data clerk who matches each household member against ACCESS, the State's online integrated case management system. This check, done for essentially all household members, determines if anyone in the household is currently receiving, or has received in the past, food stamps, AFDC or Medicaid benefits anywhere in the State. This ensures against duplicate participation and, if the applicant was a previous beneficiary (a match was found in about half of the cases checked), provides prior case information that can assist eligibility workers to make a correct determination regarding the recent application.

The data clerk also conducts screening of all individuals 16 years of age or older against records of employer-reported wages and Unemployment Insurance (UI) benefits. Although done on the same computer terminal, she must log-off ACCESS and log-on to a separate mainframe computer to conduct these

matches. A match was found for about 71 percent of the applicants checked for wages and about one-fifth for UI.

Information obtained from any matches is printed out and attached to the application forms. These are then forwarded to the assigned eligibility worker who will conduct the client interview.

During the interview, the eligibility worker reviews all of the information provided by the applicant as well as any discrepancies uncovered through the computer matches that have been done (e.g., unreported wages). Generally speaking, the burden of resolving such discrepancies is placed upon the applicant; however, eligibility workers sometimes conduct independent verifications such as contacting employers and workers assist applicants who do not know how to verify information or are unable to do so.

Incidence of Detected Discrepancies. Of the 220 applications that went to final determination or denial, only 2 had a discrepancy that was detected through applicant matching and which affected the household's benefits; and neither of them were an outright denial.

Costs of Applicant Matching. The cost of conducting applicant matching consists of the labor needed to screen client-reported information, the associated computer costs, and the cost of resolving any discrepancies that are detected. For the 220 applications in our sample, the total cost of applicant matching amounted to only $337 -- an average of about a dollar and a half per application.

There are three reasons why the costs are so low: the time required to screen an application on the computer is only a few minutes; computing costs are generally small for such simple transactions; and, the number of discrepancies detected is relatively small, and for the most part, the burden of resolving them is placed on the applicant.

Savings From Applicant Matching. Even though only two cases were found to have benefit changes, these cases generated about $379 in savings from reduced transfer payments (i.e., food stamps, AFDC and Medicaid). About two-thirds of these

savings were a result of the match against the wage records with the balance coming from the UI screening.

Combining the savings and costs produces a benefit cost ratio of 1.1, i.e., for each $1 spent on applicant matching about $1.10 is saved. Therefore, applicant matching is modestly cost effective despite the low incidence of detected discrepancies. The costs are very low and the benefit savings associated with errors is relatively large when projected over the time period during which the overpayments would be expected to be paid in the absence of applicant matching.

Other Benefits of Applicant Matching. In addition to the quantitative benefits noted above, State and local staff pointed out a number of other important benefits attributable to applicant matching: the presence of a computer terminal during the client interview has an intimidating effect on clients that leads to more careful reporting of their circumstances; clients are deterred from misreporting because they don't know how much information caseworkers have access to; and, caseworkers have additional time to devote to other aspects of casework, since the applicant-matching system quickly and efficiently provides them with needed information.

ORGANIZATION OF CASE STUDY

This case study is divided into three parts: a discussion of aspects of applicant matching that are common throughout the State of South Dakota including the management and characteristics of the Food Stamp Program, the development of computer matching, a description of the databases and computer systems used, and future development plans; a description of those aspects of applicant matching that are specific to Minnehaha County (the subject of our site visit) including the organization and characteristics of the Food Stamp Program in Minnehaha County, application and verification procedures, and county-level databases and computer systems; and, a discussion of the costs and benefits of applicant matching as measured in Minnehaha County.

Table of Contents

STATE DESCRIPTION

THE FOOD STAMP PROGRAM IN SOUTH DAKOTA

Food Stamp Program Administration and Management. The Department of Social Services (DSS) administers South Dakota's social service and income maintenance programs. Within DSS, the Office of Assistance Payments administers AFDC and Medicaid while the Food Stamp Program administers that program. South Dakota does not exercise the unemployed-parent option in its AFDC program. Also, the Federally-funded General Assistance program administered by the Bureau of Indian Affairs serves only Native Americans who are low-income and who live on one of the State's nine reservations.

In addition, Low-income Native American residents of reservations are eligible for either food stamps or food packages through the commodity distribution program. Native Americans not living on reservations are eligible for the same programs available to other State citizens.

The South Dakota Food Stamp Program is State-administered, with responsibility for operational oversight assigned to district and area supervisors. At the State level, DSS is organized into four components: management information, program management, field management, and management services. Food stamp administrative responsibility is located in:

- Management Information, where staff operation and maintain the department's automated data system;

- Program Management, which contains the Automated Eligibility Programs section where staff are responsible for designing and supervising changes the automated data system -- even though such changes are actually implemented by the Office of Information. The Food Stamp Program is also located in Program Management. Its directors administers the Food Stamp Program at the local level, setting Statewide policies and procedures.

- Field Management, where staff oversee local office operations.

Table of Contents

A key feature of this administrative structure is the placement within DSS of responsibility for designing and maintaining the State's automated data systems. State managers believe that locating this administrative responsibility within DSS enhances the State's ability to create an automated data system that responds to local needs.

As noted earlier, DSS is divided into four districts: Western, Central, Northeastern, and Southeastern. In each district, the Food Stamp Program is headed by a district program supervisor. Each district supervisor has administrative authority to deliver all Food Stamp, AFDC and Medicaid program services in his/her district. Within these districts, counties are grouped into Multi-County Service Area (MSA) offices. These entities are responsible for DSS service delivery to citizens living in their groups of counties. There are fifteen MSAs; the smallest office serves a population of about 11,000, and the largest serves over 140,000 persons. Each of South Dakota's 66 counties has an office which accepts applications and certifies applicants' eligibility for food stamps. Not all DSS services are available at every county office.

Caseload Characteristics. South Dakota's food stamp caseload is comparatively small. In April 1987, the program served almost 57,000 individuals in slightly more than 18,000 households. The vast majority of the caseload is NPA (83 percent of all households in April 1987).

Food Stamp Payment Error Rates. South Dakota has a relatively low error rate, although its dollar error rate increased slightly since 1984. Between October 1983 and March 1984, the combined overpayment error rate for the State was 4.8 percent. In the next six-month period (April to September 1984), the rate dropped to 2.2 percent. It rose between October 1984 and September 1985. During the most recent period (October 1986 to September 1987), the overpayment error rate was 2.43 percent. For the most part, these errors are related to resources and earned income, which are the major focus of applicant matching in South Dakota.

Table of Contents

SYSTEM DEVELOPMENT

Creation of the Automated Case Management System. AFDC program managers began to plan for the development of a new system early in the 1980s. By 1984, the Food Stamp Program joined the effort, and State managers decided to take advantage of favorable federal funding under the FAMIS program. If a State developed a computer system meeting federal specifications, the Department of Health and Human Services would reimburse the State for 90 percent of the systems-development costs allocated to the AFDC and Medicaid programs, while the Food and Nutrition Service would reimburse 75 percent of the cost allocated to the Food Stamp Program. The ACCESS system, which allows for one aspect of applicant matching ("Person Search") became South Dakota's FAMIS-certified system.

The ACCESS system was developed to enhance the automated data collection and processing capabilities of DSS. Although the Department used an earlier centralized automated data system, the ACCESS system is more advanced, allowing for greater speed, flexibility, and accessibility in case processing and administration. It replaced a conglomeration of separate computer systems that had developed since the late 1960s. These older systems were essentially data-entry and record-retrieval systems with little data-processing or intercommunication capacity. In addition to consolidating Medicaid and cash-assistance programs into a unified management information system, the ACCESS system also marked an advance over the old system in other significant respects:

- On-line access. In the old computer system, data from county offices were entered using a source document that had to be sent to the central DSS office in Pierre, greatly slowing down case processing. The ACCESS system allows online data entry from the county offices, making the administration of casework from the local source more direct and responsive to the client's needs.

- Individual terminals for each eligibility worker. The ACCESS system provides each worker with a terminal from which to retrieve data about any individual known to the system and to work on their cases. Individualized terminals also allow for greater management control over casework.

Table of Contents

- Person-Master Index. The old computer system had a separate case file and individual client file, making the matching of individuals to cases complicated. The ACCESS system organizes information on a client-by-client basis as well as assistance units or cases. An individual's name and SSN provide direct access to information about both the individual and the cases (households) with which the individual is, or has been, associated. One State official said the Person-Master index was one of the most important features of ACCESS.

In 1984, when State managers made the decision to build a new integrated computer system for all DSS programs, they also decided not to "reinvent the wheel" but to adapt an existing system to the needs of South Dakota. A team of State program and data processing staff visited a handful of other States (New Hampshire, Vermont, North Dakota) that had "advanced" data systems. By late 1984, the team decided to adapt the Vermont system (also called ACCESS) for use in South Dakota.

The original plan for developing and implementing ACCESS called for full implementation one year from the beginning of the period for systems analysis, which began in January 1985. The final timetable actually required 18 months for completion and included:

- systems analysis -- 1/85 - 4/85;
- programming and testing -- 4/85 - 10/85;
- pilot test in county office -- 11/85;
- training of workers -- 12/85 - 2/86;
- conversion of existing hard copy records -- 12/85 - 6/86;
- FAMIS certification review -- 9/86; and
- FAMIS certification received -- 1/87.

From the time DSS decided to find and adapt a new computer system, the effort was a joint project of program and data

systems management and staff. The planning and analysis team was composed of six Food Stamp and AFDC district managers from the four districts, the AFDC and Food Stamp Program managers, and the director of Automated Eligibility Systems. The district supervisors spent every other week in Pierre, the State Capitol, during the planning and development of ACCESS. In addition, DSS also made a decision early on to develop and implement the system internally, without the use of an automated data processing consulting firm. The one concession to this policy was to hire as a consultant to the project a technical expert who had worked on the Vermont ACCESS system for a number of years.

Once the systems analysis had been completed, Department of Social Services technical staff designed, programmed and tested the system. Equipment was installed several months prior to conversion. The equipment in each office included a mix of 3278 terminals and personal computers and a host-addressable printer in each office. After the successful pilot test of the system in one county office in November 1985, worker training and caseload conversion was implemented.

The analysis team decided that workers would be responsible for converting their own caseloads onto the new system. Therefore, the workers had to be trained before conversion could be implemented. The training coordinator at the central office developed a package that instructed caseworkers regarding the use of the new computer system, how to convert cases and how to use the system for the administration of all assistance programs. The district program supervisors were made responsible for training workers in their respective districts. The training took approximately one week per group and all workers were trained between December 1985 and February 1986. Workers were trained in groups of ten and scheduling was carefully worked out to avoid short staffing an office during the busy times of each month. The Minnehaha county office decided to train its workers offsite in rented office space.

Once trained, workers began converting cases. Although also responsible for ongoing casework, they had to convert cases at a rate no slower than one case per day. Most workers were

Table of Contents

able to proceed more quickly and conversion was completed by the end of May 1986.

Development of Computer Matching. As the issue of food stamp error rates increasingly became a matter of public concern in the late 1970s and early 1980s, the South Dakota Department of Social Services began to consider ways to reduce overpayment errors and detect and prevent program fraud and abuse. In 1981, DSS arranged for a quarterly tape-to-tape match of welfare clients against DOL wage and UI files. While this match proved to be a useful tool for uncovering past overpayments and suspected fraud, it did not contribute directly to information needed during the certification process and was, therefore, less useful in preventing errors and fraud.

In 1986, during the implementation of IEVS, DSS arranged for online access to the DOL files. While DSS and DOL were developing a system for the more frequent file matches required under IEVS regulations, DSS convinced DOL to allow direct access from county offices. By this time, DOL had already given DSS a number of terminals for use by quality control reviewers and Child Support Enforcement workers. Although DSS had begun to use these terminals to perform online DOL matches at application on a selective basis, it wanted to be able to match all applicants for all welfare programs. In early 1987, DOL gave DSS ten additional terminals for the DOL system for applicant matching.

Problems Encountered. With regard to the development of the automated case management system, State staff pointed out two problems: reconciling differences between the Vermont and South Dakota programs including the significantly larger proportion of the South Dakota caseload that are monthly reporters and the use of an integrated prospective/retrospective system in South Dakota; and, sufficient mainframe computer capacity requiring an upgrade to an IBM 3090.

Development Costs. State staff could not disaggregate the cost of developing the ACCESS system in a way that could specifically identify the cost of creating the ability to perform applicant matching. The total cost of developing ACCESS was estimated to be $2.8 million.

Table of Contents

The costs of developing and implementing the online DOL applicant-matching system were absorbed by DOL, as are the costs of operating the system. Data clerks operating the DOL system were trained at approximately the same time they were trained for the ACCESS system.

FUTURE DEVELOPMENT PLANS

South Dakota is about to implement, or is in the planning stages for, a number of changes to their current applicant matching system.

First, DSS and DOL staff are currently discussing a plan for DOL to make available to DSS a weekly tape of its quarterly wage and UI file. The DSS would then load the tapes unto the ACCESS system. The advantages to DSS include:

- immediate access to up-to-date DOL file information for each eligibility worker; and,
- the consolidation of information from three DOL files (quarterly wage, UI, employer name and address) onto one screen on the ACCESS system.

The advantages to DOL include the return of twenty-five terminals and increased security for the DOL system.

The South Dakota Bureau of Vital Statistics is in the process of developing a new computer system for its records. The system will allow online access by other State agencies. Although they have not worked out the detailed specifications of the matching system, DSS plans to develop procedures to match against Vital Statistics records both at application time and on an ongoing basis for active recipients.

The South Dakota Department of Motor Vehicles (DMV) is also in the process of changing its computer system as part of the development of a new Statewide criminal justice automated data system. When completed, DSS will be able to have online access to DMV records. State officials have not yet decided, however, whether to match with DMV at each application.

An agreement in pending with the Bureau of Indian Affairs to allow for automated verification of tribal land lease

income. Major difficulties in this kind of match include the issues of confidentiality and extremely centralized control of data processing activities.

Although it is not clear whether DSS would like to be able to match with bank records at application, they would prefer to have access to banking records at some time. Undeclared household resources are seen as a large source of error that might be decreased by reviewing State banking records. The major barrier is the reluctance of the State banking commission to risk the privacy of the State's banking customers. The need to do this kind of match, however, has been greatly diminished since implementation of the IRS 1099 match.

STATE DATABASES USED TO VERIFY APPLICANT-REPORTED INFORMATION

Public Assistance Benefit Records. South Dakota's ACCESS system is a "FAMIS-certified" automated case management and benefit calculation system for the State's AFDC, Food Stamp, Refugee Cash Assistance, and Medicaid Programs. ACCESS meets the standards for Financial Assistance Management Information System (FAMIS) certification to qualify the State to receive substantial federal matching grants for planning, development, and implementation.

The component of ACCESS used for applicant matching is "Person Search," which contains the following data:

- name of each individual who has been associated with a food stamp household or AFDC family (up to five aliases may be entered in this field);
- Social Security number of each individual and duplicate SSNs;
- case identification number for each case -- food stamp household or AFDC family -- of which the individual is a member, including both active and closed cases;
- date of birth of each individual; and,
- gender of each individual.

Table of Contents

The person search component of ACCESS includes an automatic matching of all new applicants against all individuals known to ACCESS. This prevents duplicate records for an individual. Matches must be resolved manually by field workers and State office staff working together.

The ACCESS system permits online inquiry from individual computer terminals available to each eligibility worker. (Anyone or all of these identifiers can be used to locate client records) If a match is found, workers can, through a series of menu screens, access detailed information about individual clients or assistance units. Data include:

- name;
- case number;
- programs for which the individual has been certified;
- address of case;
- current case status;
- dates of program participation, and;
- county in which the case is, or was, active.

The conversion of the old computer system to ACCESS began in December 1985 and was completed in June 1986. ACCESS contains historical information exists only on individuals receiving some aid since spring 1986. Data in the ACCESS system reflect the current status of individuals and cases up to the last caseworker update and all history since the case was converted to ACCESS. Most updating from county offices is done online from workers' terminals. Information from outside the welfare system (for example, Child Support Enforcement data) is batch-entered. The split between online and batch updating of ACCESS is approximately 90 per cent and 10 per cent, respectively.

Table of Contents

Eligibility determination combines online and batch procedures. Information is communicated online, but the actual data processing to determine eligibility is done by a queuing system that is four times as powerful as online data processing and costs one-third the price.

Wage and Unemployment Benefit Records. The automated database maintained by the South Dakota Department of Labor (DOL) contains data on all DOL programs. Applicant matching in the Food Stamp Program draws on Master Wage files, Employer Information files, and Unemployment Insurance (UI) Master Claims files.

The Master Wage File contains the quarterly wages earned the individuals in jobs covered by the UI program for each of the last full five quarters. Employer identification numbers for each job are also in this file. Because South Dakota is a "wage-reporting State," employers covered by the UI program are required to report quarterly wages paid to employees within thirty days of the close of a quarter. Wage reports are batch-entered onto the system, so the latest quarterly information is usually at least two months old and can be as much as five months old. New data are entered whenever employers submit information, thus the online quarterly file is usually more up-to-date than are downloaded tapes of quarterly wage information. The Employer Information File contains the names and addresses of all employers reporting wages to the UI system. The Unemployment Insurance (UI) Master Claims file is updated online from local UI offices. This file contains information on: whether an individual has applied for or is receiving UI; the amount of the latest weekly UI payment; the amount paid so far under the current claim; and the amount of money remaining in the individual's UI account. The Master Claims File contains a snapshot of the current status of UI claims for individuals. Data on active cases -- including applications -- are updated weekly.

The Social Security number (SSN) is the individual file identifier to access both the Master Claims and the Master Wage Files. Using SSNs sometimes leads to the incorrect assignment of earnings to individuals because the Social Security numbers are incorrect or because an individual uses more than one Social Security number.

Table of Contents

The wage and UI data are also used for batch matches against records of applicants for, and recipients of public assistance as required by IEVS. Those batch matches are conducted monthly for applicants and newly certified households and quarterly for the entire State caseload.

FEDERAL DATABASES USED TO VERIFY APPLICANT-REPORTED INFORMATION

BENDEX and SDX Benefit Records. These data are used to match against records of active recipients of public assistance on a monthly basis. The BENDEX batch match also includes applicants, though information on applicants is typically not returned in time enough to be used in the certification process. Third Party Queries (TPQ) are also used to verify social security benefits because the turnaround time is from 7-10 days.

BEERS and IRS 1099 Records. These data sources are used to match against records of public assistance applicants and newly certified recipients. These batch matches are conducted monthly for the BEERS data and bi-monthly for the IRS data.

COMPUTER HARDWARE AND SOFTWARE

Central Computer. The ACCESS system resides on an IBM 3090 mainframe computer. The DOL wage/UI data reside on a separate IBM 370 mainframe computer

Communications. Local offices interact with the ACCESS system through IBM 3270 terminals and PCs used to emulate 3270 terminals, high-speed modems, and 3270 local and front-end controllers supported by synchronous data link control protocols via leased telephone lines. Access to the DOL database is through the same system but users must log-off one and log on the other to switch from one to the other. Printouts are obtained in the local offices by desk-top impact printers connected to these same 3270 controllers.

CICS supports the interface between endusers and the central computer using the teleprocessing method, Virtual Telecommunications Access Method (VTAM). VTAM provides a transparent network for direct transmission of data between terminals in session and the central computers, as well as management and monitoring functions.

Table of Contents

Software and Operating System. The ACCESS system is written in the fourth-generation language, Natural, with some use of COBOL, as well; the database system is ADABAS. The DOL System uses primarily COBOL programming and ADABAS as its main database system. Both systems operate in IBM's Multiple Virtual Storage system with Extended Architecture (MVS/XA) designed for large online interactive network systems.

Security. The online files of the ACCESS system are protected by four layers of security. The first level of security is the Resource Access Control Facility (RACF) security package (an IBM software product) which is used to control access to the State's teleprocessing network. This is the basic password control system employed by the State. The basic features of the system are that passwords are changed every thirty-two days, duplicate passwords using a password more than once are prohibited, and are approved for only certain types of transactions, (e.g., inquiry only) and transactions are recorded for accounting and billing information. Users who fail to correctly identify themselves to the RACF system after three tries have their passwords revoked.

The second level of security is the SS18 Online Systems Security System. The primary tool it uses is a file containing a record of each DSS employee. The RACF security system passes data on each logged-on user to the SS18 system identifying the user. The SS18 file includes, for each person, a USER-ID, name, and some information descriptive of their location in the department as well as their geographic location. Each user has a list of permissions associated with their record that details the transactions that they are allowed to perform from a terminal device. The permissions list is checked prior to performing an online transaction.

"Natural Security" is a third level of security that is part of the software programming and which protects the online and batch use of ADABAS files. Natural Security involves the use of password security on the various files in ACCESS and checks the authority of the user through the Natural Security File.

Table of Contents

The fourth level is ACCESS security, controls all of the "roles" and "functions" authorized for each user. It ensures that the commands entered within the ACCESS applications by a user are consistent with the permissions authorized for the user. The control files with each individual's roles and functions are maintained by the DSS security officers and ACCESS administration staff through online update and query capability.

THE ACCESS system controls the processing of data on the ACCESS system by assigning a "case status" to the case. This case status tracks the status of a case and controls the issuance of benefits and reporting of cases that need to b processed by caseworkers. Caseworkers cannot change the status of a case and therefore cannot bypass any edits or controls that may prevent the issuance of a benefit. Benefits cannot be issued without having the entire edit and eligibility processing of ACCESS completed and showing an eligible result and a disbursement amount that is calculated by the system. There is no provision for worker override.

Finally, the integrity of the ACCESS database is protected by a system that backs-up the data files each night to a tape file that is also duplicated and stored at an offsite storage location. Should the online files fail, staff reported that the entire ACCESS system can be recovered in four to six hours.

Table of Contents

DESCRIPTION OF APPLICANT MATCHING IN MINNEHAHA COUNTY

THE FOOD STAMP PROGRAM IN MINNEHAHA COUNTY

The local office described below is in South Dakota's Southeastern District, which encompasses 21 counties and close to half (44 percent) of the State's population. The 21 counties in the Southeastern District are disaggregated into four Multi-County Service Areas (MSA). The local office in this case study, which is located in Sioux Falls in Minnehaha County, is the headquarters for one of the four MSAs in the district. This MSA includes Lincoln, McCook, Minnehaha, and Turner Counties.

In addition to being the MSA office the Minnehaha welfare office serves as the county income assistance office. Sioux Falls has a population of about 142,000, so this MSA is the largest in the State. The Sioux Falls food stamp caseload in April 1987 was 6,303 individuals in 2,435 households -- about 13 percent of the households in the South Dakota Food Stamp Program. A substantial majority (79 percent) of the households in the Sioux Falls caseload are NPA clients.

With some 600 cases, the State's quality control sample does not allow for meaningful analysis at the county or MSA level. Statistics do exist, however, for the Southeastern district, in which the Sioux Falls office lies. The latest case error rate (including underpayment cases) was 13.8 percent. The Statewide case-error rate is 14.8 percent. (Case error rates are significantly higher than dollar error rates. The latter do not include underpayments, while the former include errors that may not have fiscal consequences.)

Staffing and Organization. In the Sioux Falls office, the Food Stamp Program is administered by 19 caseworkers in three supervisory units of five to seven caseworkers each. One unit handles only AFDC and PA food stamp cases. The other two units deal primarily with NPA food stamp cases, although they handle some AFDC and PA food stamp casework as well, Altogether there are ten caseworkers handling AFDC/food stamp cases, and nine handling NPA cases. Caseworkers are responsible for both initial certification of households as well as for ongoing case management and recertification.

Table of Contents

Each unit supervisor has overall responsibility for the integrity of the casework performed by his/her unit. Although supervisors do not have to sign off on each case, they are supposed to review each application before the caseworker enters it into the State's master computer files.

Worker caseloads vary between PA and NPA caseworkers. For NPA-only workers, the caseload is currently about 200 cases; for PA-only workers, it is about 100 cases.

COUNTY DATABASES USED TO VERIFY APPLICANT-REPORTED INFORMATION

The assistance office in Minnehaha County uses the two State-maintained databases described earlier. Access is online from terminals in the local office. There were no additional county-level databases used for applicant matching in Minnehaha County.

COUNTY HARDWARE AND SOFTWARE

One of the most important features of the ACCESS system in Minnehaha County (as is true throughout the State) is the "ownership" of a uniquely identified terminal for each eligibility worker in the State. This allows a minimum accessibility and management control over data entry and data processing.

However, because online accessibility to the DOL automated data system is limited by the technical constraints on the entry ports available to the mainframe computer, there is only one DOL terminal in Minnehaha County.

Some smaller county DSS offices in the Southeastern District do not have their own DOL terminals and must telephone applicant-matching requests to the Minnehaha County office. However, staff said that the telephone requests from these counties did not put an unreasonable burden on the data clerk in charge of applicant matching. In the overwhelming majority of instances, the Minnehaha office could respond to information requests while the caller was on the line.

Table of Contents

APPLICATION AND VERIFICATION PROCEDURES

In Sioux Falls, case processing for food stamp applications essentially involves four steps:

- Step 1 -- Initial intake;
- Step 2 -- Applicant matching;
- Step 3 -- Intake interview; and
- Step 4 -- Followup and benefit determination.

Within these steps there are procedural variations stemming from food stamp case type (PA or NPA). Local procedures are summarized in the flowchart in Exhibit 1.

Step 1: Initial Intake. The Sioux Falls welfare office is in a modern two-story brick building, located just outside the downtown area. Applicants enter a large reception area with counter opposite the front door, where a receptionist asks a few basic questions in order to determine the programs for which they want to apply and for which they may be eligible. Applicants seeking noncash assistance, such as social services, are directed to other offices. The receptionist also attempts to determine whether the applicant is potentially eligible for both AFDC and food stamps (PA cases) or only food stamps (NPA cases). These two types of food stamp households are treated somewhat differently with regard to scheduling initial interviews with eligibility workers. Receptionists also prescreen applications for entitlement to expedited service. If they appear eligible for expedited service, they are seen the same say or the next day in order to meet the 5 day processing standard.

Individuals applying for NPA food stamps may not be able to complete initial eligibility interviews on the same day they appear at the welfare office. Applications for NPA food stamp households are scheduled for 3 pm each day. During the first half of the month, NPA applicants who appear at the office before 3 pm or after 3:30 pm are given three options (1) waiting for an available worker; (2) coming back at 3 pm, or, (3) filling out and leaving the first page of their applications and being scheduled for an initial eligibility

Table of Contents

South Dakota Applicant Matching Process

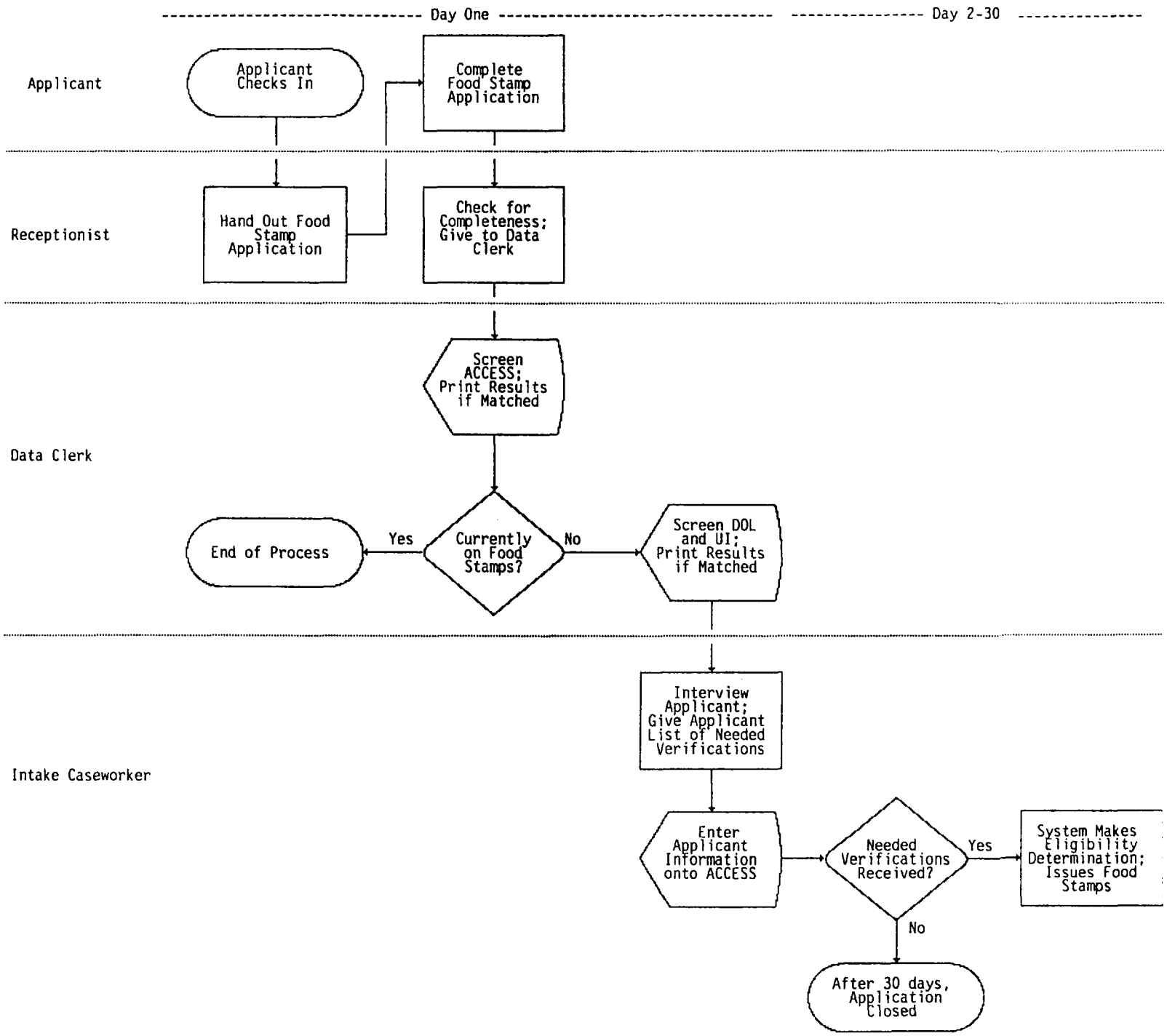

interviews, usually within three or four days. During the second half of the month, when NPA workers are handling household monthly income reports, NPA applicants who do not show up between 3 pm and 3:30 pm may choose only options (2) or (3). Individuals applying for both AFDC and food stamps are usually seen by an eligibility worker on the same day they appear at the office.

These applicants are given applications to complete. There is a single application for PA and NPA food stamps, although the NPA applicant does not fill out the AFDC sections. The receptionist reviews completed applications to ensure they contain sufficient information to perform the applicant matches. Applications are sent to data clerks who match information on the applications with automated data files. At this time, the receptionist also assigns applications to eligibility workers.

Step 2: Applicant Matching. While applicants are waiting to be interviewed by eligibility workers, a data operator checks the information in each application against existing databases. Two sets of matches are performed; one checks identifying information about each member of the applicant household against the current automated welfare files (ACCESS). The other checks each adult (children are not checked) in the applicant's household against the State's computerized earned income and UI payments files.

The major purposes of this ACCESS match are to eliminate the issuance of duplicate benefits to individuals who have applied for or may already be receiving food stamps and to allow for the transfer of active cases from other counties to Minnehaha County. In addition, the match is used to collect existing information about an applicant household that can be used during the initial application interview. Often the ACCESS match provides data on prior receipt of food stamps.

When a match occurs, the operator prints out the relevant Case Status History record. This printout includes the previously assigned case number, the types of aid received, the address of the household in which the individual was receiving aid, and the periods during which the household or family was eligible for aid.

Table of Contents

The second match, with DOL files on wages and UI indicates whether or not the applicant or any other adult in the household has applied for, or is currently receiving, unemployment benefits. In the latter case, the file indicates the size of the payments, when they began, how long they will continue, and the balance of the applicant's UI account.

Step 3: Intake Interview. The next step in the application process for an applicant who is seen by an eligibility worker the day of application is the intake interview. For NPA cases, the intake interview and the entire application process is handled on a rotating basis by the nine NPA food stamp workers. Starting at 3 pm each day, the workers are available for intake and are assigned one case an afternoon in a given order of assignment. For PA cases, which are accepted immediately for intake at any time during the day, two PA workers are assigned to intake for an entire day on a rotating basis.

After the data clerk checks the applicant's household against the online data files, she puts the application together with any relevant printouts from the matches and, if the household has received food stamps from the Sioux Falls office in the past, collects the hard copy file of the case for the eligibility worker. If it is a reopened food stamp case, the eligibility worker uses the existing case file and number.

The assigned eligibility worker picks up the application and supporting materials from either the data clerk or the receptionist. The eligibility worker meets with the applicant and reviews the application. Often, either just before sitting down with the applicant or at the beginning of the eligibility interview, the worker will check the ACCESS system both as a way to become familiar with the case and, if the applicant is present, as a way to demonstrate some command over information about the applicant's household.

During the eligibility interview, the worker typically checks the information on the application with the applicant and reviews any further requirements for additional information or documentary verification. If the DOL match shows

information about past employment, the eligibility worker may ask the applicant to either bring in evidence that the job has ended or to document the current income on the application.

There are some variations in this activity. For example, if the only income indicated was earned several quarters ago, the eligibility worker may not require evidence that the applicant is no longer employed. On the other hand, one eligibility worker indicated that in a small portion of cases ("about 10 percent"), the employer indicated in the DOL match is contacted to verify the evidence requested from the applicant.

After the interview, the caseworker (rather than the data entry clerk) usually enters the application on to the State's computer files as a pending case and awaits the additional information required from the applicant. If the applicant household already has a pending application anywhere else in the State, the caseworker is aware of this information since only one application date can be entered for any program. If the applicant household received food stamps in the past from another county, the eligibility worker requests the hardcopy case file. The worker occasionally follows up on information supplied by the applicant that appears to be questionable. In general, however, the responsibility for collecting additional required information lies with the applicant.

Step 4: Followup and Benefit Determination. After the eligibility interview, each applicant has a list of required documentation. Each applicant household is provided with a notice of pending status listing information required to complete the application. In most instances, applicants do not meet again with eligibility workers. They drop off the necessary documents with the receptionist. If, however, follow-up by the eligibility worker reveals new or conflicting information that must be changed on the application, the applicant will be called back to make the necessary changes, or to initial changes made by the eligibility worker.

The worker may request other non-routine data matches during the certification process. For example, if the applicant or

a member of the household is a Native American, the worker may request information from local offices of the Bureau of Indian Affairs about whether the applicant is receiving General Assistance or food from the Commodity Distribution Food program. Occasionally, the worker will request information from the Department of Motor Vehicles.

The application is completed when the applicant has provided all verifications, has filled out all required sections, and has signed the form. In some instances, workers manually determine eligibility and benefits. Although the ACCESS system automatically determines eligibility and allotments some workers prefer to make this determination as a double check. All cases are reviewed by unit supervisors, after which the worker enters the relevant information from the case (such as household income and resources) into the ACCESS system, which automatically determines eligibility and household benefits. The system also generates an automatic mailing to the applicant household explaining the basis for the determination of eligibility, the amount of their allotment, the period for which they are certified and when benefits will begin. Workers can also generate comments to the client as part of these ACCESS-generated notices. For example, a worker may wish to remind the household of a needed verification.

Table of Contents

THE EFFICACY OF THE APPLICANT-MATCHING SYSTEM IN SOUTH DAKOTA

This section explores the effectiveness of applicant matching in South Dakota. First, results from the quantitative cost-benefit part of the study that are particular to South Dakota are summarized. Then, the qualitative perceptions of local and State staff on the utility of applicant matching are explored, including the effect on payment error rates and the extent to which it deters client misreporting.

MEASURABLE COSTS AND BENEFITS OF APPLICANT MATCHING

The costs of applicant matching include staff time to both screen cases and followup on whatever discrepant information is discovered through the applicant matching process, as well as charges associated with using the computerized databases. The staff time spent on screening was measured through time motion studies conducted on-site, while followup time was measured through worker time logs associated with each case.

The benefits of applicant matching include reductions in benefit payments based on information obtained from matching, denials of benefits to clients who would have been certified in the absence of matching information and, from these same denials, administrative cost savings from avoiding the administrative costs that would have associated with keeping these cases on the rolls. These benefits were measured by abstracting information from a sample of cases (220 that went through to final certification or denial) on (1) what the applicant originally reported their household situation to be; (2) what household situation the final benefit determination was based on; and (3) whether any of the changes in the client's household situation, between that originally reported by the applicant and that used in final benefit determination were attributable to computer matching. Changes attributable to applicant matching were translated into changes in food stamp, AFDC, and Medicaid benefits, and projected over the period of time during which the applicant would have been receiving the overpayments in the absence of the matching information.

Information Obtained from Applicant Matching. Information obtained from applicant matching in South Dakota included data on the applicant's current and prior receipt of public

Table of Contents

assistance benefits, wage history and receipt of unemployment benefits. However, there was significant variation in how often these data sources were used to match applicants. The most commonly accessed source was the benefit history records which were accessed 98 percent of the time, while both the wage and unemployment benefits records were consulted a little bit over three-quarters of the time.

There was also substantial variation in how often accessing the source actually produced information on the applicant -- that is, produced a "hit". The highest level of hits was recorded checking wage records, where 71 percent of attempts produced information about the applicant. The next highest was the benefit history records, where about half of attempts produced at least some information pertinent to the applicant. The lowest level was for checking unemployment compensation where less than one-fifth of attempts produced hits.

Even where matches were obtained, these hits did not often uncover discrepancies in the applicant-reported information. The proportion of hits that uncovered discrepancies was 2-3 percent for wages and unemployment compensation records and zero for the benefit history records.

Costs of Applicant Matching. The costs incurred obtaining the matching information described above were generally quite low. Total costs for matching the 220 completed cases were only $336.96, or an average of about a dollar and a half a case.

Of this total, about two-fifths percent was accounted for by the costs of accessing the computerized databases -- roughly about 26 cents to screen an individual against a single database. The other three-fifths of the cost was due to the staff time involved in screening the cases and following up on the match results.

One important reason why the staff time costs were so low is that screening the cases -- that is, performing the actual match on a computer terminal -- is not a very time-consuming process. Both the benefit history screening and the

wage/unemployment compensation screening took about a minute and a half for a cost of less than 62 cents each.

Similarly, following up on match results did not consume a lot of caseworkers' time, either. This was because so many cases involved little or no followup time at all. Of course, where a match did not produce a hit, there was no followup time involved. And, even where there was a hit, if the match results simply corroborated the applicant-reported information, the amount of time spent following up was very small.

Benefits of Applicant Matching. Benefits from applicant matching can occur where benefit levels are affected by the results obtained from computer matching, or where denials could be attributed to these results. In South Dakota, there were only 2 instances where benefits were affected by discrepancies uncovered through applicant matching, and neither of them were denials.

This produced a very modest total savings of $378.90. Of this total, easily the largest proportion was due to matching on the wages database. Savings from this one database exceeded $260, or over two-thirds of the total amount. The other savings were from screening the UI files, which saved a little under $120. There were no savings from screening the benefit history files.

Relationship of Benefits to Costs. Overall, the benefits of applicant matching in South Dakota, while very modest indeed, still managed to outweigh the costs. The ratio of benefits to costs was 1.12 to 1 and the net savings (savings minus costs) was $41.94.

The most effective database, from the standpoint of net savings, was the wages database. Matching on this database generated a net savings (i.e., savings loss costs) of about $150, a figure over three times the total net savings. This was followed by matching on the UI database, which netted a little over $40 in savings.

The reason why net savings from matching wage records could be so much greater than total net savings is that matching

one of the other databases actually lost a (relatively) large amount of money. This was the benefit history matching, where costs exceeded savings by more than $150.

In general, though, applicant matching in South Dakota appears to be cost-effective, if only very modestly so. This cost-effectiveness is amazing in view of the fact that very few errors seem to be uncovered through applicant matching (in our sample, only two). However, even a very small number of applicant errors, when translated into a monthly benefit savings, and projected out over a number of months, appear to be adequate to outweigh the low costs, and produce a somewhat favorable benefit-cost ratio.

STAFF PERCEPTIONS OF APPLICANT-MATCHING EFFECTIVENESS

Effect on Payment Error Rates. It is generally acknowledged, both by county and State officials, that the applicant-matching system has clear advantages for quality control in the Food Stamp Program. Although no direct evidence is available, staff believe that the applicant-matching system has had a particular effect on errors due to unearned income (specifically Unemployment Insurance payments) and on duplicate issuance of food stamp benefits. Both causes of error have virtually disappeared since the introduction of applicant matching. In addition, the applicant-matching system is presumed to have had indirect effects on erroneous payments, chiefly through its effect on deterring applicant misreporting of information.

Deterrence Effects. The applicant-matching system used in South Dakota has had two types of effects on program accuracy. First, as suggested above, the system improves case accuracy by detecting applicant misreporting in a number of eligibility areas. A second effect on case accuracy, however, is the deterrence effect, or the extent to which the system deters applicants from reporting erroneous information.

Although neither county or State management and staff have direct evidence to support their views, they all believe that the applicant-matching system has an important deterrence effect that goes beyond even the narrow range of data directly collected through applicant matching. In particular, two reasons for the deterrence effect have been cited:

Table of Contents

-- the presence of a computer terminal during the application interview is thought to have an intimidating effect on applicants; (if the applicant is trying to misreport).

-- when applicants are occasionally confronted by the eligibility worker with accurate information that the applicant did not supply (for example, the identity of former employers), it is thought that applicants believe that the eligibility workers have access to a broad range of information that would undermine any attempt to misreport.

Effects on Case Processing. Both supervisory and caseworker staff claimed that the applicant matching system has improved the accuracy and timeliness of casework. While the old computer system had some capacity to perform online "person search," the files were organized by household head; this sometimes made it difficult to identify a given individual within a household. The ACCESS system files are organized by individual, making identification much easier. In addition, the ACCESS system's capacity to retrieve hard copy of automated files on any case from any county in the State makes potentially valuable information available to the caseworkers at the very beginning of the application process.

The online DOL match at application similarly allow the eligibility worker quicker access to important case information. While the monthly IEVS-DOL match of applicants and newly certified recipients could make the same information available, it would, in most instances, be available to the caseworker only after the eligibility determination had been made.

An additional advantage of the applicant-matching system cited by county office personnel is the added efficiency it provides for casework. Previously, cases were entered onto the State master files by means of a hard-copy source document (a "turnaround document" or TD) sent from the county offices to the central computer center. Occasionally, these TDs were not accepted by the computer (e.g., the computer indicated duplicate issuance, or the TD contained contradictory information, etc.).

The previous system also allowed for the potential for duplicate issuances because workers wrote out many hand-issued ATPS and if a pending application or approval was not entered on the system immediately, the household could apply for and receive benefits in another county and not be discovered until the turnaround document was encoded.

In these instances, the TDs were usually sent back to the county offices for correction by the eligibility workers, a process that could take over a week. With the ACCESS system, however, automated case processing is handled directly from the county offices; an unacceptable entry is therefore known immediately to the eligibility worker.

Another efficiency afforded by the ACCESS system is its ability to perform automated and integrated eligibility determination online. Given raw data about household income, resources, composition, and other eligibility factors, the ACCESS system automatically generates eligibility and grant decisions for both the Food Stamp and AFDC programs. Although workers usually like to make these calculations on their own, anyway, the ACCESS system provides a validation of the workers' calculations. In addition, the integrated eligibility process makes it easier for workers to administer both food stamp and AFDC cases; indeed the DSS has plans to train all workers as generic workers and not just as NPA or PA specialists.

A final advantage cited by county office management and staff is the amount of worker time it frees up for other aspects of casework. That is, the efficiencies that applicant matching and the ACCESS system allow for case processing makes more time available for more traditional social work activities, such as referral to other services, help in receiving employment and training services, etc.

In addition to the benefits of the applicant-matching system for casework, the system also helps supervisors and county office managers. Because supervisors must review each application prior to eligibility determination, the system allows access to information useful for supervisory review. In addition, the applicant-matching system and the online

Table of Contents

eligibility determination on the ACCESS system have afforded "cleaner" casework for supervisory review. Finally, management control is aided by a number of features of the ACCESS system that allow for casework scheduling and monitoring (e.g., the IEVS verification checklist and monitoring system).

Finally, it is the general belief at the Minnehaha County office that the applicant-matching system has some advantages for applicants who are not withholding information or giving false information. By verifying client-reported information, it reduces the burden placed on applicants to obtain supporting information.

Table of Contents

Table of Contents

APPENDIX K

THE USE OF COMPUTER-ASSISTED VERIFICATIONS OF APPLICANT-REPORTED INFORMATION IN KNOX COUNTY, TENNESSEE

For further information contact:

Department of Family Services
2247 Western Avenue
Knoxville, Tennessee 37921

Table of Contents

Table of Contents

APPLICANT MATCHING IN TENNESSEE

This study of applicant matching is based on three types of information: interviews with State officials and local staff in Knox County's West Office conducted during a five-day site visit in July 1987; the abstraction of data from the application records of all individuals applying for food stamps in the West Office during a period of four weeks; and worker time logs and time-motion studies.

SUMMARY

Operational Description. Residents of Knox County may apply for food stamps each weekday beginning at 8:00am. Applicants complete one-page forms which are used for initial computer matches. While these matches are completed, potential clients complete full application forms. Clerks match applicants against Tennessee's case management database to ascertain whether or not each applicant is known to the system as a former or current recipient. Hardcopies of all attempted matches are printed. For cases where matches occur, receptionists obtain further information (benefits history, current case status, and the like) and print copies of the information.

Applicants who are members of existing cases are sent to ongoing caseworkers. All other applicants are seen by intake interviewers who review initial case files (one-page forms, full applications, and any printouts from computer matching). They also list needed verification documents for each applicant. These interviewers may not reject applications. However, if an interviewer doubts that an applicant can meet the standard of need, s/he may calculate a preliminary food stamp budget to indicate to the applicant that there may be a problem with eligibility.

Clients sign their applications and return to the reception desk where they are assigned an intake interviewer and given an interview appointment (usually within three to seven days).

Case files are then sent to closed-case clerks who locate and integrate existing case records into the files. These files are then forwarded to clerks "register" (enter) each case into the Automated Client Certification and Eligibility Network for Tennessee (ACCENT). At the present time, this subsystem must integrate case data from Tennessee's old

Table of Contents

(TWIS) and new (TCIS) case management systems. When TCIS is fully implemented, TWIS will be dismantled. Tennessee's automated systems allow applicants to be matched with public assistance benefit records, wage and Unemployment Insurance (UI) data, overpayment claims information, birth records as well as federal databases from the Social Security Administration. All of these State and federal databases are routinely accessed; 97 percent of the applications in this study were screened against all of these databases. Matches were obtained for 84 percent of attempts checking benefit history records and for 62 percent of attempts checking wage records. Other data sources infrequently produce matches.

ACCENT then generates a "Match Packet" for every applicant entered onto the automated system. Match Packets are merged with case files for use by intake interviewers. These interviewers may recheck automated data or request more information. Data on TCIS are considered verified as received if the information is on that system. During intake interviews, caseworkers review case files with applicants. In general, applicants must provide documentation to resolve discrepancies. Caseworkers rarely initiate third-party requests for verification.

Incidence of Detected Discrepancies. Of the 306 applications that went to final determination or denial, there were no uncovered discrepancies between applicant-reported information and external data that affected applicant eligibility or benefits.

Costs of Applicant Matching. The cost of applicant matching consists of the labor needed to screen applicant-reported information, the associated computer costs, and the cost of resolving any discrepancies that are detected. For the 306 applications in our sample, the total cost of applicant matching totaled $512, or about $1.66 per application.

Costs are low because performing computer matches takes very little staff time and because no discrepancies were found.

Benefits From Applicant Matching. There were no measurable benefits (in the form of reduced or avoided transfer payments or avoided administrative posts) attributable to applicant matching in Tennessee. As a result, applicant matching lost money -- $512, the total costs of conducting the computer matches.

Table of Contents

Other Benefits of Applicant Matching. State and local staff believe that applicant matching saved money by preventing the issuance of duplicate benefits. No data have been collected to support this widely held belief.

Local staff also believe that the simple existence of computerized matching information deters applicant misreporting. Local workers and administrators consider the system extremely useful as a case processing tool because: it facilitates retrieval of existing case files; obtains match data in a timely manner; avoids duplicate applications and issuance; and simplifies the verification process by eliminating some of the burden of proof from recipients.

ORGANIZATION OF CASE STUDY

This case study is divided into three parts: a discussion of aspects of applicant matching that are common throughout the State of Tennessee including the management and characteristics of the Food Stamp Program, the development of computer matching, a description of the databases and computer systems used, and future development plans; a description of those aspects of applicant matching that are specific to Knox County (the subject of our site visit) including the organization and characteristics of the Food Stamp Program in the county, application and verification procedures, and county-level databases and computer systems; and, a discussion of the costs and benefits of applicant matching as measured in Knox County's West Office.

Table of Contents

STATE DESCRIPTION

THE FOOD STAMP PROGRAM IN TENNESSEE

Food Stamp Program Administration and Management. The Tennessee Department of Human Services (DHS) administers the State's family assistance programs. An applicant may apply for Food Stamps only (NPA food stamps), for Aid to Families with Dependent Children (AFDC-BASIC) which is automatically an application for the Food Stamp Program as well (PA food stamps), for Medical Assistance (MA), or for Medically Needy Medicaid. Other income-maintenance programs in Tennessee include Child Support Enforcement, Social Services, Rehabilitation Services, and Community Services. Tennessee does not maintain a State-funded general assistance program for needy adults nor does it offer the unemployed parent option under AFDC.

Administratively, the Tennessee Department of Human Services is highly decentralized with service delivery responsibilities assigned to 95 county offices. Tennessee counties are organized into nine geographic regions. Local offices in three large regions are further subdivided into smaller administrative groups.

The DHS Assistant Commissioner for Family Assistance DHS supervises Directors of Food Stamps, AFDC, Medicaid, Child Support, and Program Services, as well as nine Family Assistance District Program Directors. The Office of the Director of Food Stamps establishes and implements program policies and provides training on policy changes; the District Program Directors are in charge of field operations. The State also provides local offices with a number of support services, including administration, resource allocation; program information; physical capacity planning and provision; auditing, legal, investigative support; and personnel services.

The Information Systems Services Division of the Office for Information Resources manages computer services for DHS, operating a mainframe computer, overseeing systems development and access, and providing storage capabilities.

Caseload Characteristics. Over time, the Tennessee Food Stamp Program has had a relatively stable caseload. There is some seasonal variation, with local caseloads dropping during the summer months. The State caseload was somewhat higher

Table of Contents

several years ago. In April 1984, close to 206,000 households were certified in the Tennessee Food Stamp Program. This number had dropped to under 190,000 by April 1987.

Tennessee issued close to $24 million dollars in food stamp coupons in April 1987. The average value of a household's allotment was $125.

Food Stamp Payment Error Rates. Since 1980, Tennessee has made significant progress in reducing the payment error rate in its Food Stamp Program. The State's preliminary overall error rate for October 1985 through September 1986 was 5.2 percent, a substantial drop from the 11.9 percent rate in October 1980 through March 1981.

SYSTEM DEVELOPMENT

Creation of the Automated Case Management System. The Tennessee Welfare Information System (TWIS) was designed and implemented in the early 1970s. At that time, AFDC and food stamps were independent programs with separate workers and offices, so this case management system was developed with separate databases. The Food Stamp Act of 1977 required that an applicant file only one application for both AFDC and food stamps. As a result, DHS reorganized so that generic Family Assistance workers handled both programs, and workers began to request that the two databases be connected.

Therefore, a primary objective of the newly developed Tennessee Clearinghouse Information System (TCIS) was to provide the State with an integrated computer system to support the AFDC, Food Stamp, and Medical Assistance Programs. It was also intended to meet Federal certification requirements and to accommodate new regulatory initiatives including IEVS.

In early 1981, a study was authorized to evaluate TWIS and establish goals and objectives for a newly designed system. A Systems Overview Committee was appointed with representatives from DHS Policy and Systems, Information Systems Services Division (ISSD) of the Office for Information Resources (OIR), and International Business Machines (IBM). The committee, called the Automation Transfer Team (ATT), met from April through June 1981. The ATT, in keeping with IBM's study methodology, interviewed eligibility workers, program directors, policy writers and other service delivery and program staff. Representatives of the

committee also visited Wisconsin and Georgia to review their automated systems.

Modification of the two older automated systems, TWIS-PA and TWIS-FS, was considered. However, the modifications required to integrate them were beyond the capability and flexibility of the existing databases so this option was discarded. Another option was system transfer. State staff reviewed twenty-two State systems. Two State systems seemed viable (Wisconsin and North Dakota). Each raised significant problems for Tennessee, however, and the notion of system transfer was dropped. The next option considered was modification of a proven system design. If complete documentation of a system that could meet Tennessee's needs was available, a significant amount of time (and money) could be saved. State staff reviewed system documentation in other States, particularly North Dakota, Wisconsin, and Pennsylvania. However, none of these systems met Tennessee's needs. The option of a contractor-operated system was briefly considered, but State staff felt that the loss of control and the need for stringent guidelines for a third party venture mitigated against this approach.

Thus, in-house development became Tennessee's choice; several conditions supported this decision. First, Tennessee had experienced systems and program staffs familiar with all aspects of program operation. Second, DHS had strong working relationships with the central data processing facilities of ISSD and confidence in the expertise of ISSD staff. Third, Tennessee felt that the conversion of TWIS must be under the control of State staff, and an existing task force could serve as liaison between program and systems staff. Finally, TWIS could be patched to function while a new system was designed and implemented.

A temporary solution to some of the problems of TWIS was provided by the CLIENT Database. CLIENT is updated daily, is organized by individual, has name and SSN search capabilities, and retains closed and rejected cases for three years. Full implementation of the CLIENT subsystem took only nine months. CLIENT is, however, a temporary solution. The State cannot afford to maintain duplicate databases for any length of time.

Table of Contents

The Tennessee Clearinghouse Inquiry System (TCIS) is an integrated computer system designed to collect data from various agencies and departments of State and Federal governments. It will be used across the State to determine eligibility, manage ongoing cases, and help reduce fraud and error. At present, TCIS coexists with the old case management system, TWIS, which will continue to be used until TCIS and its new applicant database, ACCENT, are fully operational. ACCENT will support client applications, the master client database, and intake processing. Exhibit 1 shows the conceptual interrelationships between the TWIS, TCIS, and ACCENT systems.

Development of Computer Matching. The purpose of ACCENT, the Intake subsystem (Phase I of TCIS), is online registration of new or initial AFDC, food stamp, or Medicaid applications. A major feature is the overnight printing of Match Packets in response to application registration "requests." Information gathering and systems analysis for Phase I was completed on schedule in November 1983. Systems testing of online registration and Match Packet production began in August 1984, and the pilot began in Williamson County in October 1984. The full production pilot began in November. Statewide implementation, however, was delayed until April 1985 to allow installation of a new mainframe. Implementation was completed in August 1985, when the new State Data Exchange (SDX) AND BENDEX subsystems were also functioning as working files in the Social Security Administration databases (installed in 1984 and 1985 respectively).

The Claims Online Tracking System (COTS) was designed to track AFDC overpayment and food stamp overissuance, record repayments, produce demand letters on past due accounts, produce statements on all active accounts, and record and track individuals excluded from participation in the AFDC or Food Stamp Programs. Analytic specifications for COTS were completed in January 1985. In May 1985, an interim claims system the Claims History and Interim Reporting System (CHAIRS) was installed. CHAIRS converts existing claims, checks the accuracy of these claims, counts claims, and provides claims totals needed for Federal reporting. COTS was implemented across the State in July 1987.

EXHIBIT 1: CONCEPTUAL DIAGRAM OF SYSTEM: TWIS, TCIS, AND ACCENT

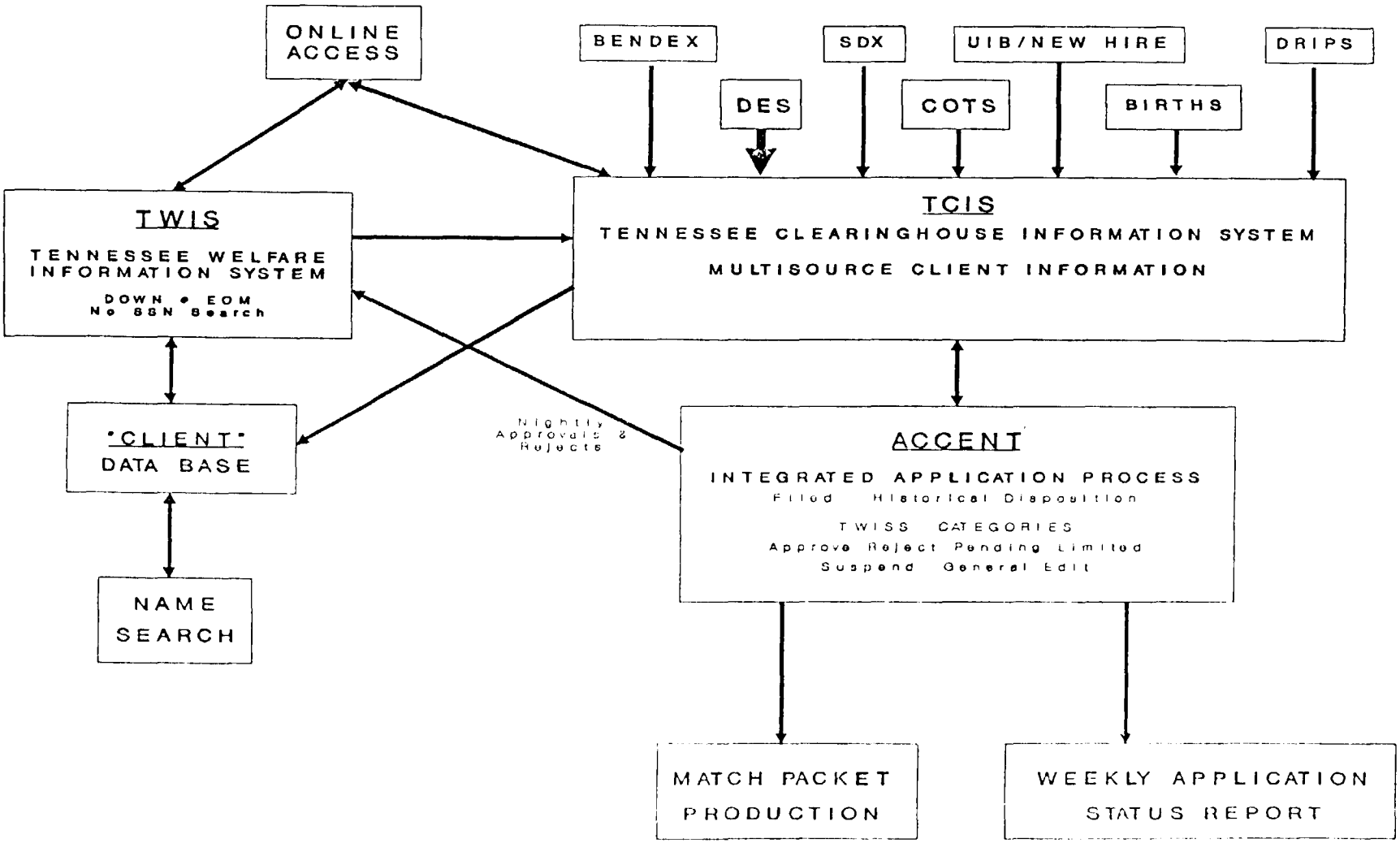

Table of Contents

Problems Encountered. TCIS experienced problems found in many new systems: modem and controller problems, printer jams, multiple telephone company interfaces, and old equipment outages. These problems have presented no special difficulty to the State and have been dealt with satisfactorily.

In addition, of course, there have been numerous problems associated with the overlap between the old (TWIS) and new (TCIS) systems. Extensive modifications provided some patches, but the two TWIS databases were never intended to be integrated. One problem was the lack of interfaces with other databases such as Vital Statistics, Motor Vehicle Registration, or wage and UI benefits. The system did not store adequate historical data to track denials, rejections, or disqualifications. TWIS does not have Social Security Number (SSN) search or a soundex system, so locating existing case files is difficult. TWIS does not allow immediate registration of applications to prevent clients applying for benefits in several local offices. Finally, each month, the system is down for three or four days for routine maintenance.

Development and implementation of TCIS have been relatively trouble-free. Staff attribute this success to: Tennessee's extensive consideration of alternative development methodologies in order to identify the strategy best suited to the State; the involvement of policy, service delivery, and systems staff which resulted in solid working relationships among divisions; senior managers support of automation as a method to reduce error rates; and, the negotiating skills of State staff in dealing with outside data sources.

Development Costs. The total cost of the development of ACCENT's Intake Phase was $581,683, with $396,481 (68 percent) contributed by the Food and Nutrition Service (FNS). In particular, the Match Packet portion of ACCENT, the part of the intake phase most clearly related to applicant matching, cost $32,439, with FNS bearing $22,058 (68 percent) of the development costs.

Table of Contents

STATE DATABASES USED TO VERIFY APPLICANT-REPORTED INFORMATION

Public Assistance Benefit Records. This section describes both TWIS and TCIS. Tennessee's new computer system will combine information from Food Stamp/AFDC/MA Benefit Records (now on TWIS) with numerous external data sources, so, when TCIS is fully operational, it will assume functions now completed by TWIS as well as providing the comprehensive database for applicant and recipient matching.

Interim use of data from TWIS are noted to explain the continuity of applicant-matching during system transition. The process of filing an application and generating a Match Packet currently bridges the systems through an interface constructed between the old TWIS data and the new TCIS applicant and client data.

TWIS manages food stamp and public assistance data in two separate programs, TWIS-FS and TWIS-PA. While TWIS-FS is a separate program, the functional areas in TWIS-FS are similar to TWIS-PA. Both programs provide eligibility control, issuance control, and reports on service delivery in Tennessee. The PA subsystem adds check reconciliation and accounting, as well as a Medicaid interface, to the service delivery functions.

Daily online inputs to the client database are batch processed overnight, so information from new applications and reapplications is available within one day. Limited individual and case data remain on the database for three years after a case has been closed or rejected. Detailed case and individual data are purged from TWIS after one year of inactive status. For a client who has been closed or rejected during the past eleven months, all information is available. If a case was closed or rejected more than eleven months ago, only name, case name, county, case status and date, program type, case location, and case ID number are available.

As discussed above, TCIS is an integrated computer system that is now being implemented in Tennessee. The system will integrate case management data (from TWIS as well as on new cases) with data from: Tennessee birth records; DES quarterly wage earnings, Unemployment Insurance (UI) benefits, and records of new hires; SSI benefits; and, Social Security benefits. All individuals listed on applications for public assistance will be matched against these files.

Table of Contents

TCIS will provide all of the case management, reconciliation, and reporting functions now performed by TWIS. In addition, TCIS contains an intake subsystem, called ACCENT, which establishes a client database, handles applicant matching, and produces information (in Match Packets) which caseworkers use during eligibility determination.

ACCENT System -- Applicant Database. ACCENT retrieves data from TWIS and TCIS and maintains a database containing information on all applicants for public assistance. The system is used in local offices for online information searches and applicant registration.

At registration, if the applicant is known to the system, the relevant data is taken from TWIS and entered into the Applicant Database, using the existing case number. If the applicant is new to the system, the data are entered and a new case number assigned.

Data include: application number; county of residence; mailing and residence addresses; appointment disposition data, including the assigned worker, program for which benefits are sought, and scheduled, rescheduled, and actual appointment dates, as well as disposition by program, case number, status, and reason; authorization and transfer dates; and individual data, including name, individual ID, SSN, race, and gender. These latter data items can all serve as identifiers for matching.

All applicants are matched with information on the Applicant Database to detect duplicate applications. Each day, information from new applications and reapplications is entered online. These data are batch processed overnight, so updated information is available online within a day.

Tennessee Birth Records. Information on individuals listed on application forms is matched against Birth Verification Files provided to DHS by the Department of Health and Environment. For a name to be matched with these data, the individual must have been born in Tennessee during the years 1922 to 1930, 1932 to 1934, or 1945 to the present.

Table of Contents

The data in the Birth File are updated daily to the DHS mainframe. This update is done within the Department of Health and Environment by batch entry of new births and corrections to existing records.

Information provided includes: name on which a match was attempted; date of birth and gender; birth certificate number and status, (amended, delayed, sealed); child's name, date of birth and gender; county code; mother's maiden and given names; and father's surname and given name.

DES Quarterly Wage Earnings. Tennessee employers must submit wage data to the Department of Employment Services (DES) on a quarterly basis. DES updates the data on its own mainframe by batch entry. The wage data are updated quarterly, with the previous quarter's information. Each quarter, DES passes a tape of its entire wage file to DHS. For example, on September 30, DHS will receive a tape with information on the quarter ending June 30th.

All SSNs on each application are matched against this file. If a match is found, the last two quarters of wage information are printed for as many as ten different employers. More quarters are available by manual inquiry. If there is no match, the message "No Wage Matches Found" is printed.

The information provided includes the date the report was generated, individual name found on the DES file, SSN, amount of earnings, and employer's name and address.

DES Unemployment Benefit Records and New Hire File. Unemployment Insurance (UI) data are Tennessee's internal records of transactions and information relevant to paying out unemployment benefits within the State. A UI record for an individual contains information for one year and includes: name, gender, date of birth, address, and SSN of the individual; eligibility status for UI; duration, dates, and amounts of claims within last year; benefits paid out, including check amounts, numbers and dates; and benefits remaining to e paid out. These data are accessed by individual SSNs.

New Hire is a voluntary reporting program, designed to acquire more current employment information for DES. Employer-provided data are batch key entered by DES on its mainframe. Each week, DES sends an updated tape to DHS.

Table of Contents

Each individual with a SSN on each application is matched against the UI and New Hire files. If a hit is found, the last twenty-six weeks of UI benefits and any new hire information for up to four employers is available to the caseworker. The data for UI include the date the report was run, name and SSN of the individual for whom the match was run, and a history of all benefits paid during the last 26 weeks.

The data from the New Hire File include date the individual was hired and the employer's name and address. These data, although current, have limited coverage. Knoxville has a number of large employers who participate, but smaller companies are less likely to submit this information to the State.

Claims Online Tracking System (COTS). The new claims and recoupment system in TCIS was implemented in July 1987, the month of the site visit for this study. Its contribution to applicant matching cannot be assessed, and no copies of match reports or online data screens were available.

COTS is designed to run on the DHS mainframe computer and can be directly accessed through ACCENT. The COTS subsystem tracks recipients who have claims, who have been excluded from program participation, or who have outstanding indebtedness to DHS. Workers enter overpayments which are validated online. COTS generally uses the same identifiers (names, SSNs) for matching purposes as the other systems and returns data regarding claims and recoupment.

Each individual with an SSN listed on each application for public assistance is matched with this file. Local staff consider these data to be current and of high quality and use them frequently during the application process. In particular, local staff see the documentation value of this file as an important advantage, especially verifying information for elderly and disabled clients.

Table of Contents

FEDERAL DATABASES USED TO VERIFY APPLICANT-REPORTED INFORMATION

SDX Benefit Records. This database, which contains information on Supplemental Security Income (SSI), is updated monthly with information also provided on tape by the Social Security Administration (SSA). Data include: the date the report was generated; application number; SSN, name, date of birth, race, gender, living arrangements, and marital status of the individual; master code indicating type of recipient; payment status; county of residence; case status; SSI eligible date and amount; SSI monthly amount actually received; conditional payment to disposition of excess resources; advance and emergency payments; denial date and code (if denied SSI); last change date; unearned income data; claim identification number; payee's name and address; resource codes; spouse or parent SSN for an eligible spouse or parent; and individual's multiple SSNs.

BENDEX Benefit Records. Tennessee sends monthly tapes containing information on new applicants for public assistance benefits to the Social Security Administration (SSA). SSA then returns a tape that includes data on these individuals and on other State recipients whose SSA benefits have changed. These data, however, are not available during the application process. They are used only for recipient-matching.

BENDEX information includes: application number; individual's name and SSN; beneficiary's name, gender, and date of birth; initial entitlement date; payment status code; last transaction date; SSI entitlement information; railroad and black lung status; and health insurance information.

Benefits Earnings Exchange Reporting System (BEERS). BEERS data are transferred by tape, following an initial re-accretion of new recipients to the State BENDEX system. The returned tape provides basic BEERS wage data, while changes and new accretions are flagged by the preliminary BENDEX match and returned on the BEERS tapes. Data are screened by DHS programming staff to remove cases with employers with instate addresses, because State staff believe that more useful and more current information is available from the State's wage files. These data are used for recipients only.

Internal Revenue Service (IRS) Unearned Income Data (1099s). For recipients only, Tennessee has also begun a batch match and printout process for IRS Unearned Income

Table of Contents

information. An initial tape sent to the IRS contained

include only new applicants. The IRS responds with any existing data on their files. Staff believe that these data are at least two years old and, therefore, of little use in applicant or recipient matching. The matches are printed in notice form and forwarded to eligibility workers for followup.

Third-Party Query (TPQ). Tennessee was using an electronic transfer to SSA to access third-party query data. While this transfer provided accurate current data, it was extremely expensive, and the interface was subsequently dropped. Tennessee is now considering implementation of a programmable magnetic tape interface with these data.

Disqualified Individual Reporting System (DRIPS). This new federal data system, will provide national data on individuals disqualified from the Food Stamp Program. It was made part of TCIS in July 1987 and is scheduled to be fully operational by November 1987 when the State expects to receive a FNS tape of the entire national file. Updates are expected monthly. TCIS claims tracking will interface with this database to monitor exclusion of the client, the completion of the exclusion period, or attempts to apply for benefits in other cases. The identifiers used are name and SSN.

COMPUTER HARDWARE AND SOFTWARE

Central Computer. The Information Systems Service Division (ISSD) provides central computing services on an Amdahl 5860 mainframe computer that supports multiuser and multi-programming with 32-bit storage and transfer capability. The typical system is supplied with 48 megabytes of virtual storage, 24 communications channels, and a console.

TWIS uses two different configurations of equipment. For each of the six counties with the largest volume of transactions (Hamilton, Knox, Madison, Shelby, Washington, and Davidson), Tennessee has established separate electronic data-processing (EDP) centers. These centers house the equipment and provide all data-processing functions for the respective counties. The processor at the EDP is a

work. These minicomputers are used for data entry of source documents and transmission to the host computer in Nashville. When processing is completed, the results (the match packets, for example) are printed on attached high-speed printers for distribution to local offices.

The remaining eighty-nine counties use Tennessee's QUEST system (Quick Update Entry System for Tennessee). QUEST consists of IBM 5280 equipment capable of offline data entry, remote job entry to submit jobs to be run in a partition on the host, and data inquiry. Data is keyed to diskette and is transmitted to the host computer on a daily basis by telephone lines in remote job-entry mode.

Data are transmitted to the State host computer, for processing and updating. This computer also redirects output reports as print jobs to the EDP Centers for distribution to the appropriate county offices.

TCIS and ACCENT use the same host hardware as TWIS. As of July 1987, TCIS and ACCENT had not yet been certified as a Family Assistance Management Information System (FAMIS).

Communications. Network access is through "dumb" 3270-type terminals or 3270-PCs using high-speed modems, and 3270 local and front-end controllers supported by synchronous data link control protocols and leased telephone lines. Printouts are obtained in the local offices by desk-top impact printers connected to these same 3270 controllers.

Tennessee uses Information Management System/VS Data Communications (IMS/VS-DC) as its data communication management system to support multiple terminal applications against common databases. Teleprocessing for all online systems is driven by Advanced Communication Function/Virtual Telecommunications Access Method (ACF/VTAM). VTAM provides a transparent network for the direct transmission of data between terminals in session and the central computer, as well as management and monitoring functions. Microcomputers are supported by Systems Network Architecture/Synchronous Data Link Control (SNA/SDLC) attachment through 3270 controllers to the mainframe. Additional 3270 PCs are used to emulate terminal functions.

Table of Contents

Software and Operating Systems. The Amdahl computer runs Multiple Virtual Storage operating system in Extended Architecture (MVS/XA), designed to control programming in large online interactive computer networks.

ISSD also supports food stamp and AFDC programming with upgrades to the existing Information Management System/Virtual Storage-Database Facility (IMS/VS-DB), Versions 1 and 2. IMS/VS-DB is a full function database management system. It provides support for batch operation for data storage, manipulation, and protection. It is combined with IMS/VS-DC to achieve a complete database/data communication system. IMS/VS-DB executes as an application program under MVS/XA. It interfaces between user application programs and databases. Version 2 provides Extended Recovery Facility support, which provides automatic recovery from many hardware and software failures that might otherwise interrupt IMS/VS services. Version 2 also provides support for the COBOL programming language, used by ISSD for some DHS jobs.

Data Language/I (DL/I) executes the actual access to databases, while providing a means of reducing application program and file maintenance. DL/I provides sequential, indexed sequential, indexed direct, and direct access to data. A data security facility controls the access and process of each application program. Database logging and recovery utilities assist in database reorganization and data reconstruction.

Security. All network access is authorized and monitored by ISSD systems and staff. Full audit trails provide State and Federal auditors with the necessary paths to establish data maintenance and data change integrity. Data are protected by several software utilities, as well as various physical and procedural safeguards noted elsewhere. The database software, IMS/VS-DB, and the communications software and methods, IMS/VS-DC and VTAM, have integral security features that provide increased data security. Further, all applications programming has integral terminal, job level, and password access security.

Physical access at the county office level is controlled by placement of terminals in secured monitored areas, by limiting access to online databases to working hours, and by physical lock-and-key security systems. Terminal identifi-

Table of Contents

cation and passwords further limit access to databases. There are also transaction logs, turnaround documents, Food Stamp Authorization Listings, and address match listings that provide manual controls to county staff to signal unauthorized use of terminals. Further, there is a terminal security table associated with each terminal that prohibits an individual from changing information not originating in the county served by that terminal.

FUTURE DEVELOPMENT PLANS

The primary future development goal in Tennessee is full implementation of TCIS/ACCENT, including installation of automated procedures to convert cases from TWIS to TCIS in early 1988 and replacement of the existing TWIS Issuance, Reconciliation, and Financial Reporting programs.

In addition, an interface with the Department of Safety for motor vehicle and operator license records is planned. However, because the database contains only valid operators, and does not contain SSNs (matching must be done by name), its usefulness for applicant matching may be somewhat limited.

Other matches under consideration include: an interface with the school system to verify school attendance; an interface with the tax assessor's rolls to verify property owership; and an expanded vital records interface, including marriages, divorces, and deaths. There are some problems with all of these matches, however, especially the lack of SSNs in most of them.

Table of Contents

APPLICANT MATCHING IN KNOX COUNTY

THE COUNTY FOOD STAMP PROGRAM

Knox County, a subdivision of one of DHS' nine administrative regions, has 233 professional staff, 73 clerical seven child support assistants, three telephone operators, and eight other staff members. These staff are divided between the two county offices, Main and West. The two offices share responsibility for maintaining ongoing family assistance cases; the caseload is split alphabetically -- by client last name. The Main Office also houses administration, the claims and recovery unit, investigative services, and the data processing center. All intake for the county is conducted at the West Office. The West office, where applicant matching was observed for this study, shares an office complex with other county social service agencies, including work programs, a child and maternal health care clinic, and an elderly feeding program.

Knox County has a caseload of over 10,700 food stamp households (about 28,000 individuals), approximately 17 percent of the Tennessee food stamp caseload. A highly urbanized county, Knox has in the last year seen a dramatic increase in the number of AFDC recipients; almost 8,000 individuals have been added from April 1986 to April 1987. The food stamp caseload, however, is overwhelming NPA.

Knox County has a lower payment error rate than the State as a whole 3.45 percent, as compared with 5.2 percent. However, this number has limited significance because the confidence interval for the county estimate is quite large because of the small sample size.

Staffing and Organizations. The Family Services staff at the West office consists of an office director, fourteen supervisors, 93 caseworkers (called counselors), a data-processing staff of ten, and several clerk typists. There is a clear division of labor among staff with respect to the application process and applicant-matching activities. The reception staff (four receptionists-clerks and one computer operator) greet applicants and other clients, and distribute/collect applications and other documents. The computer terminal operator (referred to as the CRT receptionist) conducts online screening of applicants to see if they are known to the public assistance system prior to their initial interviews.

Table of Contents

Three caseworkers initially interview applicants when applications are submitted. Intake interviews are conducted by appointment three to ten days later by one of 24 intake interviewers. Seven of these workers handle non-public assistance (NPA) food stamp applications, averaging 52 intake cases each per month. The remaining 17 intake interviewers conduct intake for PA cases (AFDC applicants are always considered for the Food Stamp Program) and complete approximately 64 cases a month. Ongoing casework is handled by 61 caseworkers, with an average caseload of 346 cases; there is and one supervisor for each seven caseworkers.

The data-processing staff includes the CRT receptionist; two CRT clerks who key enter applications and handle batch matching requests (called Match Packets); two clerks who key enter dispositions; and five who batch and pre-edit cases before dispositions are keyed. Clerical staff is comprised of two closed-file clerks who track and assemble case records and a number of clerks who support the administrative staff.

COUNTY DATABASES HARDWARE AND SOFTWARE

Knox County uses all of the databases accessible through the Tennessee automated systems. The county does not maintain separate or different databases.

Terminals and other equipment in Knox County were described earlier in this case study.

APPLICATION AND VERIFICATION PROCEDURES

In the West office, case processing for food stamp applications essentially involves four steps:

- Step 1 -- Initial intake,
- Step 2 -- Verifications, including computer matches,
- Step 3 -- Intake interview, and
- Step 4 -- Benefit determination.

Each step, discussed below, is shown in Exhibit 2.

Step 1: Initial Intake. At Knoxville's West Office, which opens officially at 8am, applicants complete one-page forms indicating the purpose of their visits. Receptionists use

Table of Contents

EXHIBIT 2: FOOD STAMP APPLICATION PROCESS

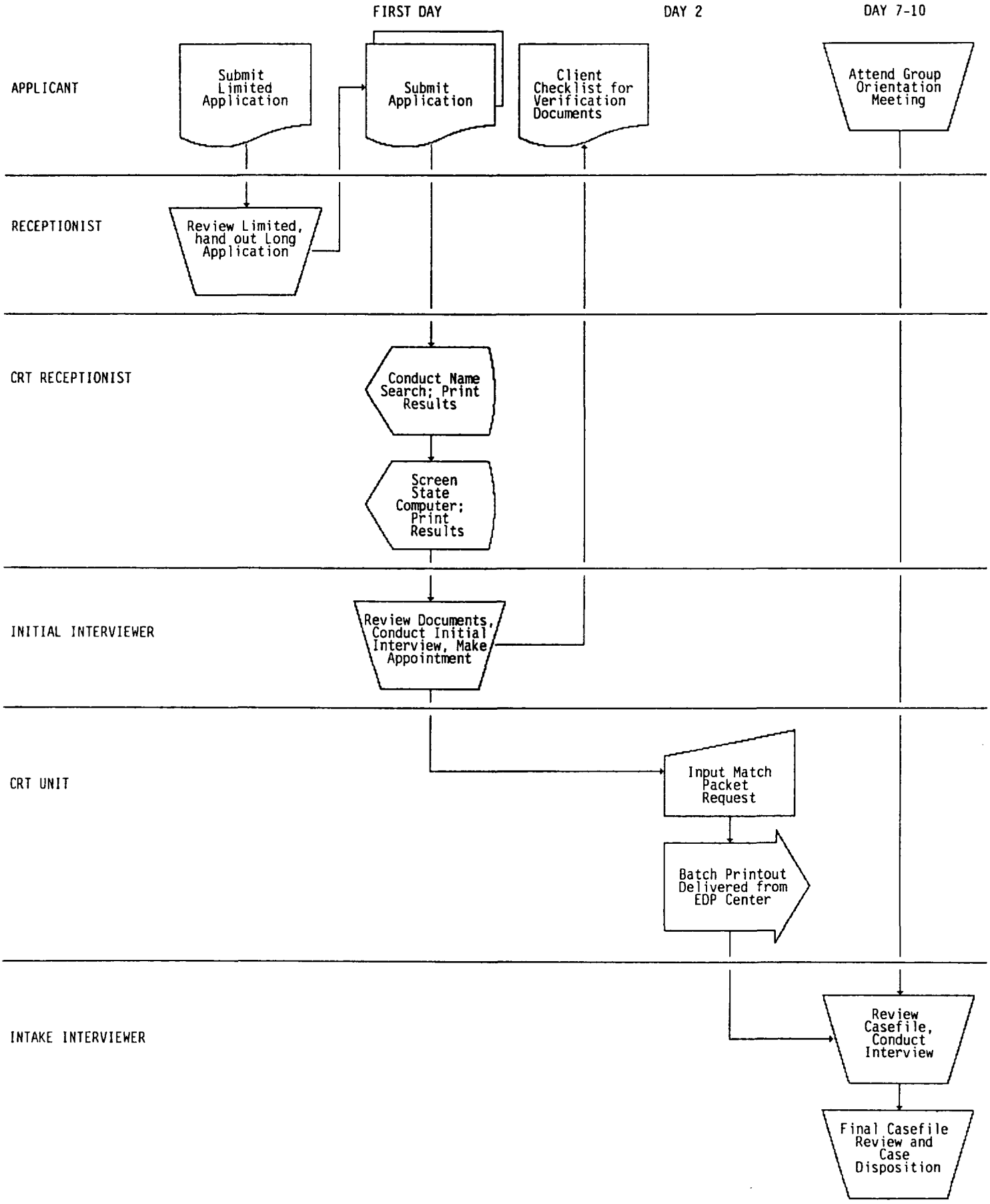

Table of Contents

this information to determine for which programs each potential client is applying. Then applicants complete application forms -- the same form is used for all public assistance programs. These forms are also returned to the front desk and are attached to the one-page forms and placed in the intake queue.

Applicants wait to be called for initial interviews (a more thorough intake interview occurs later). Meanwhile, the CRT receptionist at the front desk conducts an online name search of the case management database to determine if each applicant is known to the system as a prior or current recipient of public assistance. (The other four receptionists do not use the computer.) The response to the inquiry is a list of cases known to the system with names similar to the applicant's, showing identifying information, including date of birth, address, SSN, case ID number, status (active, closed, pending), and type of assistance (food stamps, AFDC). The CRT receptionist scans the list to determine whether any of the listed cases pertains to the applicant. A hardcopy print is made (whether or not a match is found) and attached to the application. This screen is the only match data available to the initial interviewer.

For instances in which the name search reveals a match with an existing or prior case, the CRT receptionist uses the case ID number and program to obtain more information. The Food Stamp Inquiry component of the system provides five sets of information for such cases: current case status; household budget; benefits issuance history; identification of individuals in the case; and, repayments and refunds (the last component is not yet operational). (Similar information on AFDC case participation is also available online.) The screens are printed and attached to each application for later use by the intake interviewer. If screening reveals that an applicants is part of an existing case, the client is sent to his/her ongoing regular caseworker.

Three full-time initial interviewers take applications on a rotational basis; applicants are assigned from the intake log to the next available interviewer. The interview lasts 15 to 30 minutes, depending on household size and programs are under consideration. The objectives of the initial interview are:

Table of Contents

- reviewing the application for completeness;
- answering applicant questions;
- ensuring that the applicant is applying for all relevant programs;
- checking for expedited food stamp service; and,
- preparing the applicant for the more thorough intake interview, including listing documentation requirements.

The initial interviewer neither challenges the applicant-supplied information nor uses the match data except to clarify an applicant's relationship to prior or ongoing cases. If the interviewer has doubts that the applicant will meet the standard of need, s/he may calculate a preliminary food stamp budget to determine whether there is reason to pursue the application. However, initial interviewers cannot reject applications.

At the end of the initial interview, the applicant signs the application, is given a checklist of verification documents needed for certification, and returns to the front desk. Here, the client is assigned an intake interviewer and given an interview appointment, usually scheduled within three to seven days.

Step 2: Verifications Including Computer Matches. The case file, consisting of the application and name search printout, is returned to the CRT receptionist, who prints any case status and individual screens not already attached to the application. The case file is forwarded to closed-file clerks who locate and assemble any existing case records. The printout from the initial online matches indicates the location of prior case records. For cases with a prior history in Knox County (past twelve months), the records are kept on the premises and are located within minutes. Older cases are kept in storage for two additional years before they are shredded, and these files can be retrieved within a day. For records located in other offices, requests are forwarded immediately.

Table of Contents

County staff are proud of their ability to locate case records with case ID numbers in the computer system. They claim they retrieve 95 percent of such files. The contribution of the automated case management system to this achievement is viewed as one of its major benefits. Because the majority of food stamp applicants in Knox County have prior case histories with the agency, staff believe that access to these histories contributes substantially to accurate determination of eligibility and benefits.

By the end of the day that the application is submitted, the case file is passed from the closed-file clerks to the CRT unit. Two clerks work full-time entering, or "registering," applicant data into the Automated Client Certification and Eligibility Network for Tennessee (ACCENT). These data are used to generate "Match Packets" during the nightly processing of applications registered throughout the State that day. The data available in the Match Packet repeat the online screens. The online system provides data approximately one day earlier, but at an increased expense; therefore, the Match Packet interface is the mainstay of the information system.

The database matches are run nightly for applications registered on ACCENT from local offices throughout Tennessee. The next morning, the packet is printed at the data-processing center in Knox County's Main Office. The printout is delivered to the Knoxville West Office, where clerks sort the packets and place printed materials in the appropriate case files. These files are stored until the scheduled appointment dates, when they are provided to interviewers. When records arrive from other offices, they are also merged with the appropriate case files.

Step 3: Intake Interview. At 8am on the morning of the scheduled intake interview, the applicant attends a thirty-minute group orientation meeting, where clients are informed about the rights and responsibilities associated with participation in the Food Stamp and other public assistance programs. The session includes a video-taped presentation and a question-and-answer period. Each applicant is asked to sign a single information release form. Prior to the intake interview, the caseworker reviews the application and the Match Packet. The match data may raise questions for the

caseworker that require additional information from ACCENT, TWIS, or TCIS. For example, the number of quarters that can be listed on the quarterly earnings printout is limited to two. If the database contains quarterly wages data not listed, the message "Earlier quarters information available -- See inquiry," appears at the bottom of the printout. Because access to TCIS is limited to the CRT staff, the caseworker must submit a "CRT request" to the CRT unit clerks, who retrieve and print data, either before or after the intake interview. These data are considered highly confidential; limited access is a security precaution.

Caseworkers may access the client database anytime before, during, or after the intake interview. For example, if the Match Packet identified a prior case in which a household member was active, the caseworker would want to know the benefit amounts and dates. This information could be accessed online from one of the three shared terminals. One worker, who conducts about 12 AFDC intake interviews per week, guessed that she conducted online searches for two or three cases per week, spending no more than five minutes at the terminal for each case.

The intake interview lasts 30 to 60 minutes, depending on the programs involved and household size. Documents brought in by the applicant are reviewed. In general the burden of supplying verification of identity, earned and unearned income, and assets falls on the applicant. Caseworkers may place collateral calls to employers or landlords if the applicant is unable to obtain necessary documentation; but, as a rule, caseworkers do not send out routine correspondence requesting verification information.

The TCIS data may be used as verification of any data on that system. Staff consider this benefit as major and report that having access to these data saves time for both workers and applicants.

Often, caseworkers complete cases almost immediately after intake interviews. After 30 days, if needed documentation is missing, the caseworker notifies the applicant that material must be submitted within another 30 days or the case will be denied.

Table of Contents

Step 4: Benefit Determination. When all documentation has been collected, the caseworker determines program eligibility and calculates food stamp benefits, (using a workbook and budget sheet). The caseworker also prepares a notice of disposition to be sent to the applicant and fills out a disposition document, which is used to enter the food stamp authorization onto the automated system.

Before clerical staff enter data from this authorization, the case file and the disposition document are reviewed twice. First, the caseworker's supervisor reads the case. Then, "pre-edit" staff (five members of the data-processing staff) review all cases for consistency and completeness before cases are finally sent to the disposition staff. Two pre-editors specialize in PA and three in NPA food stamp cases. Caseworker and supervisory staff report that the pre-edit checks have helped reduce computational and other errors.

Finally, case files reach two clerks in the CRT unit, who enter case dispositions. Tennessee's automated system generates benefit notices, ATPs, and coupons for all clients.

Expedited Service. Applicants likely to qualify for expedited food stamp services are flagged during initial interviews. In an expedited case the initial interviewer accompanies the applicant to the appointment desk and, if possible, arranges a same-day appointment with an intake interviewer. While the applicant waits, the receptionist prints the case status and individual screens for all individuals on the application. If possible, the closed file is retrieved.

The intake interview is the same as for any applicant, except there is no Match Packet to review. If the applicant qualifies for expedited service, the case disposition document is sent to the CRT unit for key entry immediately after the intake interview. Coupons are mailed within four days. The case is then assigned to an ongoing caseworker for recertification within 30 days.

If applicants for expedited service cannot be seen the same day, they are scheduled for appointments on the next working day. This one-day delay is, of course, sufficient to allow acquisition of Match Packets.

Table of Contents

THE EFFICACY OF THE MATCHING SYSTEM IN TENNESSEE

This section discusses the effectiveness of applicant matching in Tennessee. First, results from a quantitative cost-benefit analysis are summarized. Then, the qualitative perceptions of local and State staff on the utility of applicant matching are explored, including effects on payment error rates and the extent to which matching deters applicant misreporting.

MEASUREABLE COSTS AND BENEFITS OF APPLICANT MATCHING

The costs of applicant matching include staff time to screen cases and to follow up on whatever discrepant information is discovered through the applicant matching process. These costs also include the costs of using the computerized databases. Staff time spent on screening was measured through time motion studies, while followup time was measured through worker time logs associated with each application. Estimates of computer charges were derived from interviews with appropriate personnel.

The benefits of applicant matching include reductions in benefit payments based on information obtained from matching, denials of benefits to clients who would have been certified in the absence of matching information and, from these same denials, administrative cost savings from eliminating the administrative costs associated with keeping these cases on the program. These benefits were measured by abstracting information from a sample of cases (306 that went through to final certification or denial) on (1) applicant reports of household situation; (2) the household situation on which final benefit determination was based; and (3) whether any of identified changes could be attributed to computer matching.

Changes attributable to applicant matching were translated into changes in food stamp, AFDC and Medicaid benefits and projected over the period of time during which the applicant would have received the overpayments.

Information Obtained from Applicant Matching. Information obtained from applicant matching in Tennessee included data on the applicant's current and prior receipt of benefits within the Food Stamp Program and other programs such as AFDC, data on the applicant's recent wage history, data on receipt of unemployment benefits, and data on Social Security benefits (both regular and Title II).

Each of these data sources was routinely accessed, with little variation in frequency of access. Each was accessed at least 97 percent of the time.

Data sources varied widely in how often accessing the source actually produced information on the applicant -- that is, produced a "hit." The highest level of hits occurred in checking benefit history records, where 84 percent of attempts produced information about the applicant. The next highest was wage matching, where 62 percent of attempts produced at least some information on the applicant.

The rest of the data sources infrequently produced matches. SSI data produced hits 18 percent of the time, unemployment compensation data 16 percent of the time and regular Social Security benefits data produced a match under one percent of the time. Even where matches were obtained, however, there were very few uncovered discrepancies with the applicant-reported information. Moreover, none of these discrepancies resulted in a change to the applicant's benefits.

Costs of Applicant Matching. The costs of obtaining the matching information were generally quite low. Total costs for matching the 306 completed cases were only $446, or about $1.45 per application.

Over 90 percent of this total was accounted for by the costs of accessing the computerized databases -- about $0.26 for each database access attempt. The remaining costs are staff time (labor) to screen the cases and to follow up on match results.

One reason why the staff time costs are low is that screening cases -- that is, performing the actual matches on a computer terminal -- takes very little time. On average, a matching attempt required less than a minute. Similarly, follow-up consumed small amounts of caseworker time; few discrepancies were found and none affected applicant benefits.

Benefits of Applicant Matching. Benefits from applicant matching can occur where benefit levels are affected by the results obtained from computer matching or where denials can be attributed to these results. In Tennessee, there were no instances where benefit levels were affected by discrepancies

Table of Contents

uncovered through applicant matching. Nor were there any denials attributed to applicant matching.

There are, as a result, no savings attributable to applicant matching, in general, or to any particular database included in the applicant-matching system.

Relationship of Benefits to Costs. Despite the modest costs associated with applicant matching, the benefits of matching were outweighed by these costs; the net savings (savings minus costs) was -$446, the total cost of applicant matching.

Because of the lack of benefits obtained from the matching procedures, no one database could be considered any more or less effective than any other database. Each of them suffered a net loss of around $95.

Applicant matching in Tennessee does not appear to be cost-effective from the standpoint of benefit savings and staff/computer costs. In this sample, no errors were uncovered through applicant matching that affected benefits. However, even a small number of these errors, when translated into a monthly benefit savings and projected overtime would probably be enough to outweigh the low costs. Thus, the cost-effectiveness results would have turned out quite differently if just one or two benefit-impacting errors had been discovered. It is possible that a larger sample, or a number of repeated trials, would have resulted in different findings.

STAFF PERCEPTIONS OF APPLICANT MATCHING EFFECTIVENESS

Effect on Payment Error Rates. Although no reliable data have been collected which directly attribute reductions in payment error rates to applicant-matching, State and local staff believe that there have been substantial savings, particularly preventing issuance of duplicate benefits.

Official expectations are also high. According to State documents, TCIS and ACCENT are expected to reduce certification errors by 50 percent, resulting in a predicted annual savings of $436,183.

Deterrence Effects. With regard to deterrence, State staff thought that there is some effect, but that it is not quantifiable. They feel that individuals are volunteering more data at application because they know matching is being

Table of Contents

done. However, actual reduction in error rates is difficult to attribute to any single activity.

Local staff believe that the existence of the matching information helps to deter misreporting. Applicants get the impression that caseworkers can verify all information provided to them. One caseworker commented: "If an applicant says he is not working and you can then ask him: 'When did you quit working at Long John Silvers?', you certainly get his attention."

Effects on Case Processing. In general, the applicant matching system in Knoxville is considered extremely useful by caseworkers and local administrators. They note advantages in the four categories: (1) avoiding duplicate applications and duplicate issuance by cross-referencing cases and individuals; (2) retrieving casefiles so they are available for intake interviews; (3) providing outside match data in a timely manner; and (4) simplifying the verification process.

In particular, local staff rely heavily on prior casefiles to inform them of applicant circumstances. Prior to automation, it was possible to locate existing or prior casefiles only if household heads were the same. The automated case management system identifies all cases in which an individual was involved.

Another feature of the matching system which was stressed as valuable by caseworkers was the time the system saved them in verifying applicant-provided data. In Tennessee, the data provided by the Clearinghouse system stands as sufficient verification for the data item. If a mother cannot find her child's birth certificate, the caseworkers can verify the child's identity on the computer. Similarly, a disabled applicant will be saved the trouble of waiting in line at the Social Security Office because the caseworker can look up the amount of his/her SSI benefits online.